SI. . T/K

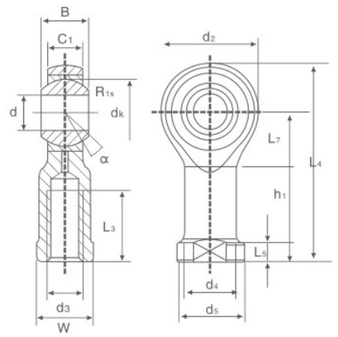

型号 Part No.	尺寸mm Dimensions														负荷KN Load ratings		重量KG Weight
	d	d3 6H	B	C1	W	h1	d2	L4	L5	d4	d5	dk	L3 -2	a ≈	动dyn. C	静stat. C0	Kg ≈
SI 5 T/K	5	M5×0.8	8	6	9	27	18	36	4	8.5	11	11.11	10	13	5.7	6	0.016
SI 6T/K	6	M6×1.0	9	6.75	11	30	20	40	5	10	13	12.7	12	13	7.2	7.65	0.022
SI 8 T/K	8	M8×1.25	12	9	14	36	24	48	5	12.5	16	15.88	16	14	11.6	12.9	0.047
SI 10 T/K	10	M10×1.5	14	10.5	17	43	28	57	6.5	15	19	19.05	20	13	14.5	18	0.077
SI 10 T/KFG	10	M10×1.25	14	10.5	17	43	28	57	6.5	15	19	19.05	20	13	14.5	18	0.077
SI 12 T/K	12	M12×1.75	16	12	19	50	32	66	6.5	17.5	22	22.23	22	13	17	24	0.1
SI 12 T/KFG	12	M12×1.25	16	12	19	50	32	66	6.5	17.5	22	22.23	22	13	17	24	0.1
SI 14 T/K	14	M14×2.0	19	13.5	22	57	36	75	8	20	25	25.4	25	16	24	31	0.16
SI 14 T/KFG	14	M14×1.5	19	13.5	22	57	36	75	8	20	25	25.4	25	16	24	31	0.16
SI 16 T/K	16	M16×2.0	21	15	22	64	42	85	8	22	27	28.58	28	15	28.5	39	0.22
SI 16 T/KFG	16	M16×1.5	21	15	22	64	42	85	8	22	27	28.58	28	15	28.5	39	0.22
SI 18 T/K	18	M18×2.5	23	16.5	27	71	44	93	10	25	31	31.75	32	15	42.5	47.5	0.32
SI 18 T/KFG	18	M18×1.5	23	16.5	27	71	44	93	10	25	31	31.75	32	15	42.5	47.5	0.32
SI 20 T/K	20	M20×2.5	25	18	30	77	50	102	10	27.5	34	34.93	33	14	42.5	57	0.42
SI 20 T/KFG	20	M20×1.5	25	18	30	77	50	102	10	27.5	34	34.93	33	14	42.5	57	0.42
SI 22 T/KFG	22	M22×1.5	28	20	32	84	54	111	12	30	38	38.1	37	15	57	68	0.54
SI 25 T/KFG	25	M24×2.0	31	22	36	94	60	124	12	33.5	42	42.85	42	15	68	85	0.72
SI 28 T/KFG	28	M27×2.0	35	24	41	103	66	136	14	37	46	47.6	51	15	86	107	0.82
SI 30 T/KFG	30	M30×2.0	37	25	41	110	70	145	15	40	50	50.8	51	17	88	114	1.1
SI 35 T/KFG	35	M36×2.0	43	28	50	125	81	165.5	17	46	58	57.1	58	16	•	•	1.6
SI 40 T/KFG	40	M42×2.0	49	33	55	142	91	187.5	19	53	65	66.6	62	17	•	•	2.4
SI 50 T/KFG	50	M48×2.0	60	45	65	160	117	218.5	23	65	75	82.5	67	12	•	•	5
SI 30- 1T/KFG	30	M27×2.0	37	25	41	110	70	145	15	40	50	50.8	51	17	88	114	1.1

–若是左旋螺纹，则在型号后面，数字前面加L。如SIL 8T/K。
–若是细牙螺纹，则在型号后面加FG。如SI8T/KFG。
–产品默认锻件，可选用车件。

材料和表面处理方式:

–杆端体:中碳钢45，表面镀锌处理；钢球:轴承钢GCr15，不电镀；内圈为黄铜H62；带PTFE。
–杆端体:可选用不锈钢304，不锈钢303，不锈钢316，表面钝化处理；钢球:可选用轴承钢GCr15镀硬铬或者用440C不锈钢。内圈:可选用低碳钢20或者不锈钢304。

– For left-hand thread, please add suffix "L",e.g.SIL 8T/K.
- For fine-pitch thread, please add suffix "FG",e.g. SI8T/KFG.
- General with forging part, also turn part is optional.

Material and surface treatments:

- Body: medium carbon steel 45,zinc plating; Steel ball: bearing steel GCr15 without chromium plating:Inner ring: brass H62, with PTFE;
- Body: stainless steel 304, stainless steel 303 or stainless steel 316 is optional with surface passivation.
  Steel ball:alternative bearing steel GCr15 with hard chrome plating or stainless steel 40C;Inner ring: alternative low carbon steel 20 or stainless steel 304.

SA..T/K

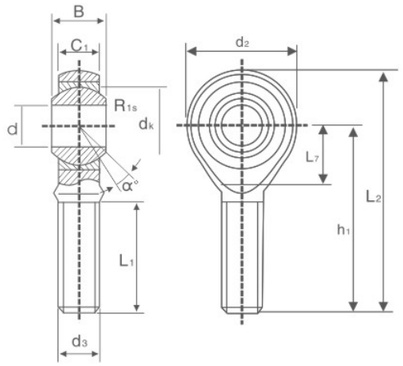

型号 Part No.	尺寸mm Dimensions												负荷KN Load ratings		重量KG Weight
	d	d3 6g	B	C1	L1 min	d2	L7	h	L2	dk	R1S	a ≈	动dyn. C	静stat. C0	Kg ≈
SA 5 T/K	5	M5×0.8	8	6	19	18		33	42	11.11	0.3	13	5.7	6	0.013
SA 6 T/K	6	M6×1.0	9	6.75	21	20		36	46	12.7	0.3	13	7.2	7.65	0.02
SA 8 T/K	8	M8×1.25	12	9	25	24		42	54	15.875	0.3	14	11.6	12.9	0.038
SA 10 T/K	10	M10×1.5	14	10.5	28	28		48	62	19.05	0.3	13	14.5	18	0.055
SA 12 T/K	12	M12×1.75	16	12	32	32		54	70	22.225	0.3	13	17	24	0.085
SA 14 T/K	14	M14×2.0	19	13.5	36	36	18	60	78	25.4	0.3	16	24	31	0.14
SA 16 T/K	16	M16×2.0	21	15	37	42	21	66	87	28.575	0.3	15	28.5	39	0.21
SA 18 T/K	18	M18×2.5	23	16.5	41	44	22	72	94	31.75	0.3	15	42.5	47.5	0.28
SA 18 T/KFG	18	M18×1.5	23	16.5	41	44	22	72	94	31.75	0.3	15	42.5	47.5	0.28
SA 20 T/K	20	M20×2.5	25	18	45	50	25	78	103	34.925	0.3	14	42.5	57	0.38
SA 20 T/KFG	20	M20×1.5	25	18	45	50	25	78	103	34.925	0.3	14	42.5	57	0.38
SA 22 T/KFG	22	M22×1.5	28	20	48	54	27	84	111	38.1	0.3	15	57	68	0.48
SA 25 T/KFG	25	M24×2.0	31	22	55	60	30	94	124	42.85	0.3	15	68	85	0.64
SA 28 T/KFG	28	M27×2.0	35	24	62	66	33	103	136	47.6	0.3	15	86	107	0.8
SA 30 T/KFG	30	M30×2.0	37	25	66	70	35	110	145	50.8	0.3	17	88	114	1.1
SA 35 T/KFG	35	M36×2.0	43	28	85	81	41	140	180.5	57.1	0.3	16	•	•	1.64
SA 40 T/KFG	40	M42×2.0	49	33	90	91	46	150	195.5	66.6	0.3	17	•	•	2.3
SA 50 T/KFG	50	M48×2.0	60	45	105	117	59	185	243.5	82.5	0.3	12	•	•	4.8

–若是左旋螺纹，则在型号后面，数字前面加L。如SAL 8T/K。
–若是细牙螺纹，则在型号后面加FG。如SA8 T/KFG.
–产品默认锻件，可选用车件。

材料和表面处理方式:

–杆端体:中碳钢45，表面镀锌处理；钢球:轴承钢GCr15，不电镀；内圈为黄铜H62；带PTFE。
–杆端体:可选用不锈钢304，不锈钢303，不锈钢316，表面钝化处理；钢球:可选用轴承钢GCr15镀硬铬或者用440C不锈钢。内圈:可选用低碳钢20或者不锈钢304。

– For left-hand thread, please add suffix "L",e.g.SIL 8T/K.
- For fine-pitch thread, please add suffix "FG",e.g. SI8T/KFG.
- General with forging part, also turn part is optional.

Material and surface treatments:

– Body: medium carbon steel 45,zinc plating; Steel ball: bearing steel GCr15 without chromium plating:Inner ring: brass H62, with PTFE;
– Body: stainless steel 304, stainless steel 303 or stainless steel 316 is optional with surface passivation.
  Steel ball:alternative bearing steel GCr15 with hard chrome plating or stainless steel 40C;Inner ring: alternative low carbon steel 20 or stainless steel 304.

PHS

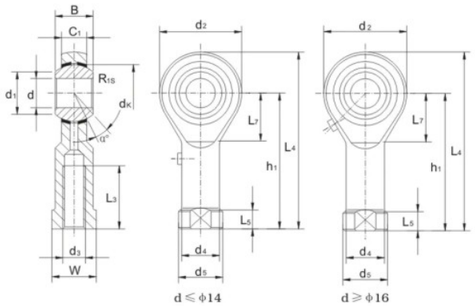

型号 Part No.	尺寸mm Dimensions														负荷KN Load ratings		重量KG Weight
	d	d_3 6H	B	C_1	W	L_3 min	d_2	L_4	h_1	L_5	d_4	d_5	d_k	d_1	a ≈	动dyn. C	静 stat. C_0	Kg ≈
PHS 5	5	M5×0.8	8	6	9	10	16	35	27	4	8.5	11	11.11	7.7	13	3.25	5.7	0.016
PHS 6	6	M6×1.0	9	6.75	11	12	18	39	30	5	10	13	12.7	8.96	13	4.3	7.2	0.022
PHS 8	8	M8×1.25	12	9	14	16	22	47	36	5	12.5	16	15.875	10.4	14	7.2	11.6	0.047
PHS 10	10	M10×1.5	14	10.5	17	20	26	56	43	6.5	15	19	19.05	12.9	13	10	14.5	0.077
PHS 10 FG	10	M10×1.25	14	10.5	17	20	26	56	43	6.5	15	19	19.05	12.9	13	10	14.5	0.077
PHS 12	12	M12×1.75	16	12	19	22	30	65	50	6.5	17.5	22	22.225	15.4	13	13.4	17	0.1
PHS 12 FG	12	M12×1.25	16	12	19	22	30	65	50	6.5	17.5	22	22.225	15.4	13	13.4	17	0.1
PHS 14	14	M14×2.0	19	13.5	22	25	34	74	57	8	20	25	25.4	16.9	16	17	24	0.16
PHS 14 FG	14	M14×1.5	19	13.5	22	25	34	74	57	8	20	25	25.4	16.9	16	17	24	0.16
PHS 16	16	M16×2.0	21	15	24	28	40	84	64	8	22	27	28.575	19.4	15	21.6	28.5	0.22
PHS 16 FG	16	M16×1.5	21	15	24	28	40	84	64	8	22	27	28.575	19.4	15	21.6	28.5	0.22
PHS 18	18	M18×2.5	23	16.5	27	32	44	93	71	10	25	31	31.75	21.9	15	26	42.5	0.32
PHS 18 FG	18	M18×1.5	23	16.5	27	32	44	93	71	10	25	31	31.75	21.9	15	26	42.5	0.32
PHS 20	20	M20×2.5	25	18	30	33	50	102	77	10	27.5	34	34.925	24.4	14	31.5	42.5	0.42
PHS 20 FG	20	M20×1.5	25	18	30	33	50	102	77	10	27.5	34	34.925	24.4	14	31.5	42.5	0.42
PHS 22 FG	22	M22×1.5	28	20	32	37	54	111	84	12	30	38	38.1	25.8	15	38	57	0.54
PHS 25 FG	25	M24×2.0	31	22	36	42	60	124	94	12	33.5	42	42.85	29.6	15	47.5	68	0.73
PHS 28 FG	28	M27×2.0	35	24	41	48	66	136	103	14	37	46	47.6	32.3	15	58	75	0.98
PHS 30 FG	30	M30×2.0	37	25	41	51	70	145	110	15	40	50	50.8	34.8	17	64	88	1.1

–外圈球面镶有黄铜衬垫
–杆端体有润滑油孔或油杯。
–若是左旋螺纹，则在型号后面，数字前面加L,如PHSL 8.。
–若是细牙螺纹，则在型号后面加FG。如PHS 8FG。
–产品默认锻件，可选用车件。

材料和表面处理方式:

–杆端体：中碳钢45，表面镀锌处理;钢球：轴承钢GCr15，不电镀;内圈为黄铜H62。
–杆端体：可选用不锈钢304,不锈钢303，不锈钢316，表面钝化处理;钢球：可选用轴承钢GCr15镀硬铬或者用440C不锈钢。内圈:可选用低碳钢20或者304不锈钢。

– Outer race is lined with brass liner.
– Rod body with a lubricating hole or grease nipple.
– For left–hand thread, please add suffix "L" ,e.g.PHSL 8.
– For fine–pitch thread, please add suffix "FG", e.g. PHS 8FG.
– General with forging part,also turn part is optional.

Material and surface treatments:

– Body: medium carbon steel 45,zinc plating; Steel ball: bearing steel GCr15 without chromium plating; Inner ring: copper H62.
– Body: stainless steel 304, stainless steel 303 or stainless steel 316 is optional with surface passivation.
Steel all alternative bearing steel GCr15 with hard chrome plating or stainless steel 440C Inner ring.alternative low carbon steel 20 or stainless steel 304.

POS

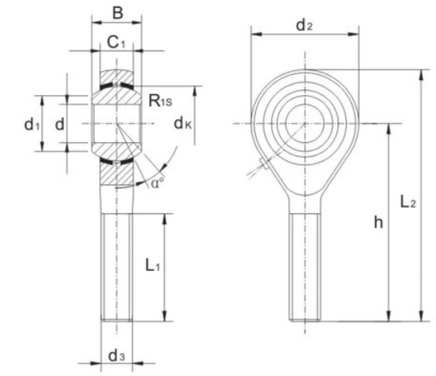

型号 Part No.	尺寸mm Dimensions												负荷KN Load ratings		重量KG Weight
	d	d_3 6g	B	C_1	L_1 min	d_2	h	L_2	d_k	R_{1S}	D_1	a ≈	动dyn. C	静 stat. C_0	Kg ≈
POS 5	5	M5×0.8	8	6	20	16	33	41	11.11	0.3	7.7	13	3.25	5.7	0.013
POS 6	6	M6×1.0	9	6.75	22	18	36	45	12.7	0.3	8.96	13	4.3	7.2	0.02
POS 8	8	M8×1.25	12	9	25	22	42	53	15.875	0.3	10.4	14	7.2	11.6	0.03
POS 10	10	M10×1.5	14	10.5	29	26	48	61	19.05	0.3	12.9	13	10	14.5	0.055
POS 12	12	M12×1.75	16	12	33	30	54	69	22.225	0.3	15.4	13	13.4	17	0.085
POS 14	14	M14×2.0	19	13.5	36	34	60	77	25.4	0.3	16.9	16	17	24	0.14
POS 16	16	M16×2.0	21	15	40	40	66	86	28.575	0.3	19.4	15	21.6	28.5	0.21
POS 18	18	M18×2.5	23	16.5	44	44	72	94	31.75	0.3	21.9	15	26	42.5	0.28
POS 18 FG	18	M18×1.5	23	16.5	44	44	72	94	31.75	0.3	21.9	15	26	42.5	0.28
POS 20	20	M20×2.5	25	18	47	50	78	103	34.925	0.3	24.4	14	31.5	52.5	0.38
POS 20 FG	20	M20×1.5	25	18	47	50	78	103	34.925	0.3	24.4	14	31.5	52.5	0.38
POS 22 FG	22	M22×1.5	28	20	51	54	84	111	38.1	0.3	25.8	15	38	57	0.48
POS 25 FG	25	M24×2.0	31	22	57	60	94	124	42.85	0.3	29.6	15	47.5	68	0.64
POS 28 FG	28	M27×2.0	35	24	62	66	103	136	47.6	0.3	32.3	15	58	75.5	0.96
POS 30 FG	30	M30×2.0	37	25	66	70	110	145	50.8	0.3	34.8	17	64	88	1.1

–外圈球面镶有黄铜衬垫–杆端体有润滑油孔或油杯。
–若是左旋螺纹，则在型号后面，数字前面加L,如POSL 8.。
–若是细牙螺纹，则在型号后面加FG。如POS 8FG。
–产品默认锻件，可选用车件。

材料和表面处理方式:

–杆端体：中碳钢45，表面镀锌处理;钢球：轴承钢GCr15，不电镀;内圈为黄铜H62。
–杆端体：可选用不锈钢304,不锈钢303，不锈钢316，表面钝化处理；钢球：可选用轴承钢GCr15镀硬铬或者用440C不锈钢。内圈：可选用低碳钢20或者304不锈钢。

– Outer race is lined with brass liner.
– Rod body with a lubricating hole or grease nipple.
– For left–hand thread, please add suffix " L" , e.g. POSL 8
– For fine–pitch thread, please add suffix "FG", e.g.POS 8FG.
– General with forging part, also turn part is optional.

Material and surface treatments:

– Body: medium carbon steel 45, zinc plating; Steel ball: bearing steel GCr15 without chromium plating,Inner ring: brass H62.
– Body: stainless steel 304, stainless steel 303 or stainless steel 316 is optional with surface passivation.
Steel ball: alternative bearing steel GCr15 with hard chrome plating or stainless steel 440C;Inner ring: alternative low carbon steel 20 or stainless steel 304.

PHSB

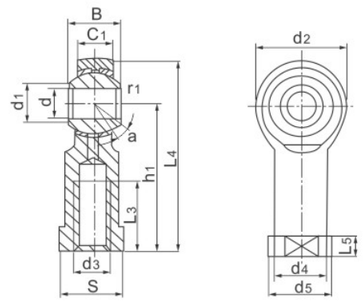

型号 Part No.	尺寸mm Dimensions														负荷KN Load ratings		重量KG Weight	
	d	B	rls	C_1 max	d_1 min	d_2 min	d_3 max	h1	L_3 max	L_4 max	L_5 max	d_4 max	d_5 max	S	动dyn. C	静stat. C_0	a ≈	Kg ≈
PHSB 3	4.826	7.925	0.3	6.35	7.8	15.88	10-32	14.27	14.27	34.93	1.75	7.54	10.31	7.92	3.4	4.6	10	0.015
PHSB 4	6.35	9.53	0.3	7.14	8.4	19.05	1/4-28	29.05	29.05	42.85	4.75	9.15	11.91	9.53	4.5	7.7	13	0.025
PHSB 5	7.938	11.10	0.3	8.74	11.4	22.23	5/16-24	19.05	19.05	46.02	4.75	10.72	12.70	11.10	6.9	8.4	10	0.036
PHSB 6	9.525	12.70	0.6	10.31	13.1	25.40	3/8-24	23.80	23.80	53.98	6.35	13.89	17.45	14.27	9.4	10	9	0.061
PHSB 7	11.113	14.27	0.6	11.10	14.9	28.58	7/16-20	26.97	26.97	60.33	6.35	15.49	19.05	15.88	11	13	11	0.081
PHSB 8	12.70	15.88	0.6	12.70	17.7	33.32	1/2-20	30.15	30.15	70.64	6.35	18.67	22.23	19.05	15	19	9	0.133
PHSB 10	15.875	19.05	0.6	14.27	21.3	38.10	5/8-18	38.10	38.10	82.55	7.92	21.84	25.40	22.23	20	21	11	0.190
PHSB 12	19.05	22.23	0.6	17.45	24.8	44.45	3/4-16	44.45	44.45	95.25	7.92	25.02	28.58	25.40	29	29	10	0.285
PHSB 16	25.40	34.93	0.6	25.40	32.2	69.85	5/4-12	53.98	53.98	139.70	11.10	37.72	44.45	38.10	60	101	14	1.00

轴承附有带螺纹的伸出杆，螺纹有左、右旋之分。
Bearing with a stretching rod,stretching rod withright or left-handfema le thread.
PHSB...S型的结构特点同PHS...S，但英制尺寸。
The type PHSB...S is as PHS....Bhe dimensions in inch
NHSB...型是挤压成形的，PHSB....是英制的。
The type PHSB....is swaged.the dimensions ininch.
内圈球面镀铬，杆端体表面镀锌。
Spher ical surface of inner ring with chromium plating,to platezincon the surface of rod body.

若是左旋螺纹，轴承型号需加“L”。例如:PHSB10S 5/8-18-3BLH
For left-hand thread,suffix ?is added to bearings number and suffix H ? Is added to thread sign,e.g.PHSB10S5/8-18-3BLH.
带的型号均不配润滑油或油杯，其余若须配油杯，请用NHSB...S
Aliubrication hole or a grease nipple is suplied on these sizes, when a grease nipple is required by the ochers,please use the sign of NHSB...S

POSB

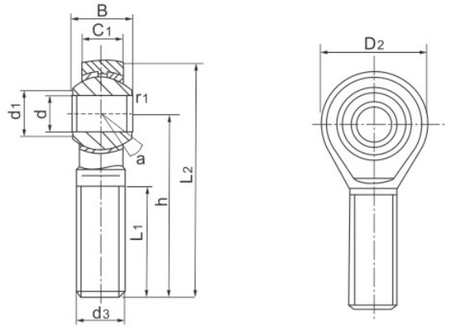

型号 Part No.	尺寸mm Dimensions												负荷KN Load ratings		重量KG Weight	
	d	B	rls	C_1 max	d_1 min	d_2 min	d_3 max	h	L_1 max	L_2 max	动dyn. C	静stat. C_0	a ≈	Kg ≈
POSB 3	4.83	7.92	0.3	6.35	7.8	15.88	10-32	31.75	19.05	39.70	3.4	3.8	10	0.013
POSB 4	6.35	9.53	0.3	7.14	8.4	19.05	1/4-28	39.67	25.40	49.20	4.5	6.6	13	0.022
POSB 5	7.94	11.10	0.3	8.74	11.4	22.23	5/16-24	47.63	31.75	58.72	6.9	8.4	10	0.037
POSB 6	9.53	12.70	0.6	10.31	13.1	25.40	3/8-24	49.23	31.75	61.93	9.4	10	9	0.055
POSB 7	11.11	14.27	0.6	11.10	14.9	28.58	7/16-20	53.98	34.93	68.28	11	13	11	0.078
POSB 8	12.70	15.88	0.6	12.70	17.7	33.32	1/2-20	61.93	38.10	78.59	15	19	9	0.12
POSB 10	15.88	19.05	0.6	14.27	21.3	38.10	5/8-18	66.68	41.28	85.73	20	21	11	0.18
POSB 12	19.05	22.23	0.6	17.45	24.8	44.45	3/4-16	73.03	44.45	95.29	29	29	10	0.29
POSB 16	25.40	34.93	0.6	25.40	32.2	69.85	5/4-12	104.78	53.98	139.70	60	101	14	1.1

轴承附有带螺纹的伸出杆,螺纹有左、右旋之分。
Bearing with a stretching rod,stretching rodwithright or left-hand fema le thread.
POSB...S型的结构特点同POS...S，但英制尺寸。
The type PHSB...S is as PHSBhe dimensions in inch
NHSB...型是挤压成形的,PHSB..是英制的。
The type PHSB....is swaged.the dimensions in inch.
内圈球面镀铬，杆端体表面镀锌。
Spher ical surface of inner ring with chromium plating,to plate zincon the surface of rod body.

若是左旋螺纹，轴承型号需加“L”。例如:PHSB10S 5/8-18-3BLH
For left-hand thread,suffix ?is added to bearings number and suffix H ? Is added to thread sign,e.g.PHSB10S 5/8-18-3BLH
●带的型号均不配润滑油或油杯，其余若须配油杯，请用NHSB...S
Aliubrication hole or a grease nipple is suplied on these sizes, when a grease nipple isrequired by the ochers,please use the sign ofNHSB...S

JF..

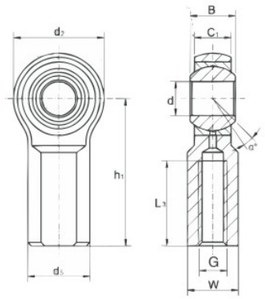

型号 Part No.	尺寸mm Dimensions											负荷KN Load ratings	径向游隙	重量KG Weight
	d 公差	B	dK	C1 max	d2 max	G 2B	h1	L3 min	W	d5	a ≈	stat. C0	Radial clearance mm	Kg≈
Jf2*	3.175	6.35	7.92	4.75	12.7	6-32	20.62	11.1	6.35	7.92	8	V5.344	0.01~0.03	0.009
JF3*	4.826	7.92	11.1	6.35	15.88	10-32	26.97	14.27	7.92	10.31	6.5	6.805	0.01~0.03	0.017
JF4*	6.35	9.53	12.7	7.14	19.05	1/4-28	33.32	19.05	9.53	11.91	8	11.297	0.01~0.03	0.027
JF5*	7.938	11.1	15.88	8.74	22.23	5/16-24	34.93	19.05	11.1	12.7	7	13.934	0.01~0.03	0.042
JF6	9.525	12.7	18.26	10.31	25.4	3/8-24	41.28	23.8	14.27	17.45	6	17.416	0.015~0.06	0.069
JF7	11.113	14.27	20.62	11.1	28.58	7/16-20	46.02	26.97	15.88	19.05	7	18.759	0.015~0.06	0.09
JF8	12.7	15.88	23.8	12.7	33.32	1/2-20	53.98	30.15	19.05	22.23	6	29.624	0.015~0.06	0.149
JF10	15.875	19.05	28.58	14.27	38.1	5/8-18	63.5	38.1	22.23	25.4	8	32.752	0.04~0.08	0.216
JF12	19.05	22.23	33.32	17.45	44.45	3/4-16	73.03	44.45	25.4	28.58	7	51.237	0.04~0.08	0.328
JF14	22.225	22.23	34.93	19.43	50.8	7/8-14	85.73	47.63	28.58	33.02	3.5	82.185	0.05~0.09	0.467
JF14-1	22.225	22.23	33.32	17.45	50.8	7/8-14	88.9	46.02	3015	33.32	6	101.601	0.05~0.09	0.467
JF16	25.4	34.93	47.63	25.4	69.85	11/4-12	104.78	53.98	38.1	41.28	8.5	193.67	0.05~0.09	0.964
JF16-1	25.4	34.93	47.63	25.4	69.85	1-14	104.78	53.98	38.1	41.28	8.5	193.67	0.05~0.09	1.093
JF16-2	25.4	34.93	47.63	25.4	69.85	1-12	104.78	53.98	38.1	41.28	8.5	193.67	0.05~0.09	1.093

尺寸单位为毫米.
注：如果是左旋螺纹，轴承型号需加“L”，例如JFL20 带*的型号均不配油孔或油杯.其余若需配油杯,请用JF..S的代号
滑动磨擦副：钢/铜
设计结构特点：杆端体材料为碳钢，锻造成型，表面镀环保白锌，可以通过油嘴或杆端眼润滑。

Dimensions in mm
Note:For left-hand thread,Please add suffix "L",e.g.JFL20
Lubricating hole or grease nipple isn't available for the size marked"*"
When a grease nipple is required for other sizes,please use the sign JF..S
Sliding contact surfaces:Steel/Steel
Design and application features:
Rod end of steel and zinc coated;Can be lubricated via a nipple or a hole in the rod end,It has
characteristic of large load capability,easy mounting and dismounting and mechanism simplification

JM..

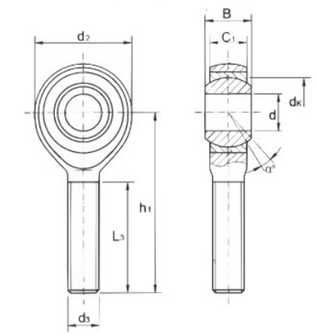

型号 Part No.	尺寸mm Dimensions									负荷KN Load ratings	径向游隙	重量KG Weight
	d 公差	B	dK	C1	d2	G 2A	h1	L3 min	a ≈	stat. C0	Radial clearance mm	Kg≈
JM 2 *	3.175	6.35	7.92	4.75	12.7	6-32	23.8	14.27	8	2.236	0.01~0.03	0.006
JM 3 *	4.826	7.92	11.1	6.35	15.88	10-32	31.75	19.05	6.5	5.197	0.01~0.03	0.013
JM 4 *	6.35	9.53	12.7	7.14	19.05	1/4-28	39.67	25.4	8	9.6	0.01~0.03	0.02
JM 5 *	7.938	11.1	15.88	8.74	22.23	5/16-24	47.63	31.75	7	12.385	0.01~0.03	0.033
JM 6	9.525	12.7	18.26	10.31	25.4	3/8-24	49.23	31.75	6	17.416	0.015~0.06	0.051
JM 7	11.113	14.27	20.62	11.1	28.58	7/16-20	53.98	34.93	7	18.759	0.015~0.06	0.073
JM 8	12.7	15.88	23.8	12.7	33.32	1/2-20	61.93	38.1	6	29.624	0.015~0.06	0.113
JM 10	15.875	19.05	28.58	14.27	38.1	5/8-18	66.68	41.28	8	32.752	0.04~0.08	0.173
JM 12	19.05	22.23	33.32	17.45	44.45	3/4-16	73.03	44.45	7	51.237	0.04~0.08	0.273
JM 14	22.225	22.23	34.93	19.43	50.8	7/8-14	85.73	50.8	3.5	82.185	0.05~0.09	0.411
JM 14-1	22.225	22.23	33.32	17.45	50.8	7/8-14	85.73	47.63	6	101.601	0.05~0.09	0.411
JM 16	25.4	34.93	47.63	25.4	69.85	11/4-12	104.78	53.98	8.5	193.67	0.05~0.09	1.091
JM 16-1	25.4	34.93	47.63	25.4	69.85	1-14	104.78	53.98	8.5	193.67	0.05~0.09	0.965
JM 16-2	25.4	34.93	47.63	25.4	69.85	1-12	104.78	53.98	8.5	193.67	0.05~0.09	0.965

尺寸单位为毫米.
注：如果是左旋螺纹，轴承型号需加“L”，例如JML20 带*的型号均不配油孔或油杯.其余若需配油杯,请用JM..S的代号
滑动磨擦副：钢/铜
设计结构特点：杆端体材料为碳钢，锻造成型，表面镀环保白锌，可以通过油嘴或杆端眼润滑。

Dimensions in mm
Note:For left-hand thread,Please add suffix "L",e.g.JFL20
Lubricating hole or grease nipple isn't available for the size marked"*"
When a grease nipple is required for other sizes,please use the sign JF..S.
Sliding contact surfaces:Steel/Steel
Design and application features:
Rod end of steel and zinc coated;Can be lubricated via a nipple or a hole in the rod end,It has
characteristic of large load capability,easy mounting and dismounting and mechanism simplification.

CF,CF..S, CF..C

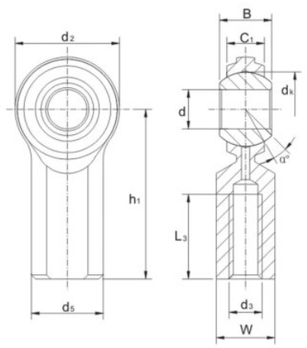

型号 Part No.	尺寸mm Dimensions											负荷KN Load ratings	重量KG Weight
	d	B	C1	h1	d_2	d_5	W	dk	L_3 min	d_3 2B	a ≈		Kg ≈
CF3*	0.19	0.312	0.234	1.062	0.625	0.406	0.312	0.437	0.5	10-32	10	9.247	0.018
CF4*	0.25	0.375	0.25	1.312	0.75	0.469	0.375	0.5	0.687	1/4-28	13.5	14.269	0.023
CF5*	0.3125	0.437	0.312	1.375	0.875	0.5	0.437	0.625	0.687	5/16-24	11	17.009	0.036
CF6	0.375	0.5	0.359	1.625	1	0.687	0.562	0.719	0.812	3/8-24	11	22.627	0.059
CF7	0.4375	0.562	0.406	1.812	1.125	0.75	0.625	0.812	0.937	7/16-20	10.5	28.4	0.082
CF8	0.5	0.625	0.453	2.125	1.312	0.875	0.75	0.937	1.062	1/2-20	10	40.459	0.132
CF10	0.625	0.75	0.484	2.5	1.5	1	0.875	1.125	1.375	5/8-18	13	43.203	0.195
CF12	0.75	0.875	0.593	2.875	1.75	1.125	1	1.312	1.562	3/4-16	12	63.193	0.295

–杆端体挤压成型
–带“*”的型号均不配油孔或者油杯，其余若需配油杯，请用CF..C的代号。
–若需装配杆子，产品型号后加S，如CF8S,
–表中负荷值仅适用不带油杯的情况。
–若是左旋螺纹，则在型号后面，数字前面加L,如CFL 8
–产品默认车件。

材料和表面处理方式：
–杆端体：中碳钢45，表面镀锌;钢球:轴承钢，镀硬铬。
–杆端体：可选用不锈钢304，不锈钢303，不锈钢316，表面钝化处理;钢球：可用440C不锈钢。

– Rod body is pressed around inner ring.
– Lubricating hole or grease nipple isn't available for the sizes marked “*” . When grease nipple is required for other sizes, please use the sign CF..C.
– If assembling with rod, please add suffix “s” , e.g.CF 8S.
– Load ratings only apply to rod ends without grease nipple.
– For left-hand thread, please add suffix “ L" ,e.g.CFL 8.
– All with turn part.

Material and surface treatments:
– Body: medium carbon steel 45, zinc plating; steel ball: bearing steel with hard chrome plating.
– Body: stainless steel 304,stainless steel 303 or stainless steel316 is optional with surface passivation.
steel ball:alternative stainless steel 440C.

CM,CM..S,CM..C

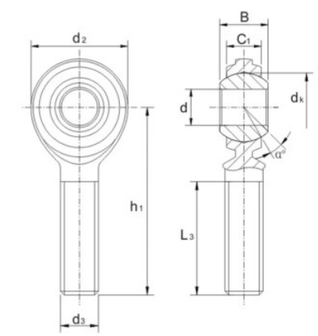

型号 Part No.	尺寸mm Dimensions									负荷KN Load ratings	重量KG Weight
	d	B	C1	h1	d_2	dk	L_3 min	d_3 3A	a ≈		Kg ≈
CM3*	0.19	0.312	0.234	1.25	0.625	0.437	0.75	10-32	10	5.355	0.014
CM4*	0.25	0.375	0.25	1.562	0.75	0.5	1	1/4-28	13.5	9.839	0.018
CM5*	0.3125	0.437	0.312	1.875	0.875	0.625	1.25	5/16-24	11	15.91	0.032
CM6	0.375	0.5	0.359	1.938	1	0.719	1.25	3/8-24	11	22.542	0.05
CM7	0.4375	0.562	0.406	2.125	1.125	0.812	1.375	7/16-20	10.5	28.223	0.068
CM8	0.5	0.625	0.453	2.438	1.312	0.937	1.5	1/2-20	10	37.087	0.109
CM10	0.625	0.75	0.484	2.625	1.5	1.125	1.625	5/8-18	13	43.203	0.163
CM12	0.75	0.875	0.593	2.875	1.75	1.312	1.75	3/4-16	12	63.193	0.259

–杆端体挤压成型
–带“*”的型号均不配油孔或者油杯，其余若需配油杯，请用CM..C的代号。
–若需装配杆子，产品型号后加S，如CM8S。
–表中负荷值仅适用不带油杯的情况。
–若是左旋螺纹，则在型号后面，数字前面加L,如CML 8
–产品默认车件。

材料和表面处理方式:
–杆端体：中碳钢45，表面镀锌;钢球:轴承钢，镀硬铬。
–杆端体：可选用不锈钢304，不锈钢303，不锈钢316，表面钝化处理；钢球：可用440C不锈钢。

– Rod body is pressed around inner ring.
– Lubricating hole or grease nipple isn't available for the sizes marked “*”.When grease nipple is required for other sizes please use the sign CLM..C.
– If assembling with rod, please add suffix “S” , e.g.CM 8S.
– Load ratings only apply to rod ends without grease nipple.
– For left-hand thread, please add suffix “L" ,e.g.CML 8.
– All with turn part.

Material and surface treatments:
– Body: medium carbon steel 45, zinc plating; steel ball:bearing steel with hard chrome plating.
– Body: stainless steel 304,stainless steel 303 or stainless steel316 is optional with surface passivation. Steel ball:alternative stainless steel 440C

SI...PK NHS

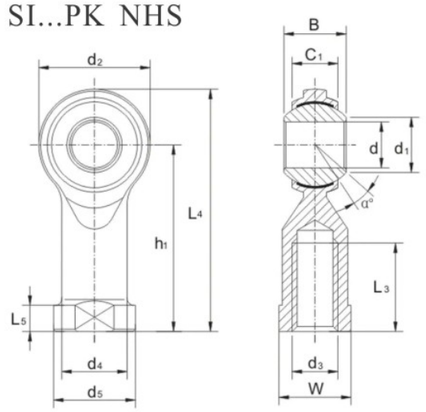

型号 Part No.	尺寸mm Dimensions													负荷KN Load ratings		重量KG Weight
	d	d_3 6H	B	C_1	d_2	h_1	L_4	L_3 min	d_5	W	d_4	L_5	a ≈	动dyn. C	静 stat. C_0	Kg ≈
SI 5 PK	5	M5×0.8	8	6	19	27	36.5	10	11	9	9	4	12	5.7	6	0.018
SI 6 PK	6	M6×1.0	9	6.7	21	30	40.5	12	13	11	10	5	11	7.2	7.65	0.026
SI 8 PK	8	M8×1.25	12	9	25	36	48.5	16	16	14	12.5	5	12	11.6	12.9	0.047
SI 10 PK	10	M10×1.5	14	11	29	43	57.5	20	19	17	15	6.5	12	14.5	18	0.077
SI 10 PKFG	10	M10×1.25	14	11	29	43	57.5	20	19	17	15	6.5	12	14.5	18	0.077
SI 12 PK	12	M12×1.75	16	12	33	50	66.5	22	22	19	17.5	6.5	13	17	24	0.1
SI 12 PKFG	12	M12×1.25	16	12	33	50	66.5	22	22	19	17.5	6.5	13	17	24	0.1
SI 14 PK	14	M14×2.0	19	14	37	57	75.5	25	25	22	20	8	14	24	31	0.16
SI 14 PKFG	14	M14×1.5	19	14	37	57	75.5	25	25	22	20	8	14	24	31	0.16
SI 16 PK	16	M16×2.0	21	15	43	64	85.5	28	27	22	22	8	14	28.5	39	0.22
SI 16 PKFG	16	M16×1.5	21	15	43	64	85.5	28	27	22	22	8	14	28.5	39	0.22
SI 18 PK	18	M18×2.5	23	17	47	71	94.5	32	31	27	25	10	14	42.5	47.5	0.32
SI 18 PKFG	18	M18×1.5	23	17	47	71	94.5	32	31	27	25	10	14	42.5	47.5	0.32
SI 20 PK	20	M20×2.5	25	18	51	77	102.5	33	34	30	27.5	10	14	42.5	57	0.42
SI 20 PKFG	20	M20×1.5	25	18	51	77	102.5	33	34	30	27.5	10	14	42.5	57	0.42
SI 22 PKFG	22	M22×1.5	28	20	55	84	111.5	37	38	32	30	12	15	57	68	0.54
SI 25 PKFG	25	M24×2.0	31	22	61	94	124.5	42	42	36	33.5	12	15	68	85	0.72

–杆端体挤压成型。
–外圈球面衬有PTFE合成材料。
–若是左旋螺纹，则在型号后面，数字前面加L,如SIL 8PK。
–若是细牙螺纹，则在型号后面加FG。如SI8 PKFG。
–产品默认锻件，可选用车件。

材料和表面处理方式:
–杆端体:中碳钢45，表面镀锌处理;钢球：轴承钢GCr15，不电镀;带PTFE。
–杆端体：可选用不锈钢304，不锈钢303，不锈钢316，表面钝化处理；钢球：可选用轴承钢GCr15镀硬铬或者用440C不锈钢。

– Rod body is pressed around inner ring.
– Outer race is lined with PTFE composite material.
– For left–hand thread, please add suffix" L",e.g. SIL 8PK.
– For fine–pitch thread, please add suffix"FG" , e.g. SI 8 PKFG.
– General with forging part, also turn part is optional.

Material and surface treatments:
–Body:medium carbon steel 45, zinc plating; Steel ball: bearing steel GCr15 without chromium plating; with PTFE;
–Body:stainless steel 304, stainless steel 303 or stainless steel 316 is optional with surface passivation
Steel ball: alternative bearing steel GCr15 with hard chrome plating or stainless steel 440C.

SA...PK NOS

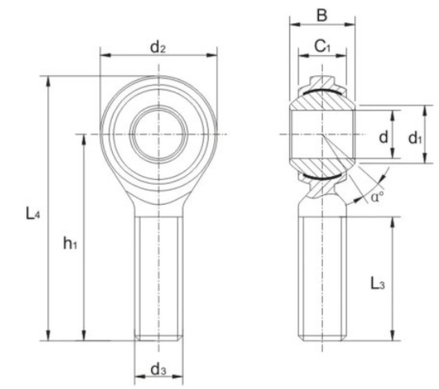

型号 Part No.	尺寸mm Dimensions									负荷KN Load ratings		重量KG Weight
	d	d_3 6g	B	C_1	d_2	h_1	L_4	L_3 min	a ≈	动dyn. C	静 stat. C_0	Kg ≈
SA5 PK	5	M5×0.8	8	6	19	33	42.5	20	12	5.7	6	0.014
SA6 PK	6	M6×1.0	9	6.7	21	36	46.5	22	11	7.2	7.65	0.02
SA8 PK	8	M8×1.25	12	9	25	42	54.5	25	12	11.6	12.9	0.038
SA10PK	10	M10×1.5	14	11	29	48	62.5	29	12	14.5	18	0.055
SA12 PK	12	M12×1.75	16	12	33	54	70.5	33	13	17	24	0.085
SA14 PK	14	M14×2.0	19	14	37	60	78.5	36	14	24	31	0.14
SA16 PK	16	M16×2.0	21	15	43	66	87.5	40	14	28.5	39	0.21
SA18 PK	18	M18×2.5	23	17	47	72	95.5	44	14	42.5	47.5	0.28
SA18 PKFG	18	M18×1.5	23	17	47	72	95.5	44	14	42.5	47.5	0.28
SA20 PK	20	M20×2.5	25	18	51	78	103.5	47	14	42.5	57	0.38
SA20 PKFG	20	M20×1.5	25	18	51	78	103.5	47	14	42.5	57	0.38
SA22 PKFG	22	M22×1.5	28	20	55	84	111.5	50	15	57	68	0.48
SA25 PKFG	25	M24×2.0	31	22	61	94	124.5	57	15	68	85	0.64

–杆端体挤压成型。
–外圈球面衬有PTFE合成材料。
–若是左旋螺纹，则在型号后面，数字前面加L,如SAL 8PK。
–若是细牙螺纹，则在型号后面加FG。如SA 8 PKFG。
–产品默认锻件，可选用车件。

材料和表面处理方式:
–杆端体:中碳钢45，表面镀锌处理;钢球：轴承钢GCr15，不电镀;带PTFE。
–杆端体：可选用不锈钢304，不锈钢303，不锈钢316，表面钝化处理；钢球：可选用轴承钢GCr15镀硬铬或者用440C不锈钢。

– Rod body pressed around inner ring.
– Outer race lined with PTFE composite material.
– For left–hand thread, please add suffix " L" , e.g. SAL 8PK.
– For fine–pitch thread, please add suffix "FG" ,e.g. SA8 PKFG.
– General with forging part,also turn part is optional.

Material and surface treatments:
– Body:medium carbon steel 45,zinc plating; Steel ball: bearing steel GCr15 without chromium plating; with PTFE;
– Body: stainless steel 304, stainless steel 303 or stainless steel 316 is optional with surface passivation.
Steel ball: alternative bearing steel GCr15 with hard chrome plating or stainless steel 440C.

SIG...ES..2RS

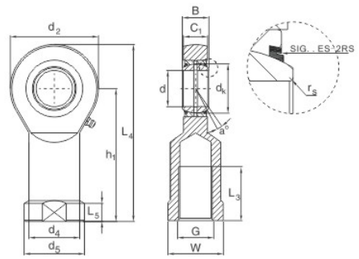

型号 Part No.		尺寸mm Dimensions															负荷KN Load ratings		重量KG Weight
		d 公差	B -0.12	dK	C1 max	D2 max	G 6H	h1	L3 min	L4 max	L5	W	d4	d5	Rs min	a ≈	dyn. C	stat. C0	Kg≈
SIG4E		4 -0.008	7	10	4.5	21	M5×0.8	30	11	40.5	5	10	10	13	0.3	20	3.4	8.1	0.016
SIG5E		5 -0.008	9	13	4.5	21	M6×1	30	11	40.5	5	11	11	13	0.3	21	5.5	8.1	0.021
SIG6E		6 -0.008	9	13	6.5	24	M8×1.25	36	15	48	5	13	13	16	0.3	21	5.5	12.9	0.033
SIG8E		8 -0.008	11	16	7.5	29	M10×1.5	43	15	57.5	6.5	16	16	19	0.3	21	8.1	17.6	0.064
SIG10E		10 -0.008	12	18	8.5	34	M12×1.75	50	18	67	7	18	19	22	0.3	18	10	24.5	0.102
SIG12ES	SIG12ES2RS	12 -0.008	15	22	10.5	40	M14×2	61	21	81	8	21	21	26	0.3	18	16	36	0.168
SIG15ES	SIG15ES2RS	15 -0.008	16	25	11.5	46	M16×2	67	24	90	10	27	25	29	0.3	16	21	45	0.24
SIG17ES	SIG17ES2RS	17 -0.01	20	29	13.5	53	M20×1.5	77	30	103.5	10	30	28	34	0.3	19	30	60	0.347
SIG20ES	SIG20ES2RS	20 -0.01	25	35.5	18	64	M24×2	94	36	126	12	36	35	42	0.6	17	48	83	0.659
SIG25ES	SIG25ES2RS	25 -0.01	28	40.7	20	73	M30×2	110	45	146.5	15	46	42	50	0.6	17	62	110	1.025
SIG30ES	SIG30ES2RS	30 -0.012	32	47	22	82	M36×3	125	60	166	15	55	48	58	0.6	17	79	146	1.59
SIG35ES	SIG35ES2RS	35 -0.012	35	53	24	92	M39×3	142	65	188	18	60	52	65	0.6	16	99	180	2.16
SIG40ES	SIG40ES2RS	40 -0.012	40	60	28	102	M42×3	145	65	196	20	65	58	70	0.6	17	127	240	2.84
SIG45ES	SIG45ES2RS	45 -0.012	43	66	31	112	M45×3	160	68	216	20	70	62	75	0.6	15	156	290	3.74
SIG50ES	SIG50ES2RS	50 -0.015	56	80	39	135	M52×3	175	70	242.5	20	80	70	88	1	17	245	450	5.73
SIG60ES	SIG60ES2RS	60 -0.015	63	92	43	160	M56×4	200	80	280	20	85	80	98	1	17	313	610	8.83
SIG70ES	SIG70ES2RS	70 -0.015	70	105	48	180	M64×4	230	85	320	25	95	95	110	1	16	400	750	14.5

尺寸单位为毫米.
注：如果是左旋螺纹，轴承型号需加“L”,例如：S1GL20ES
滑动磨擦副：钢/钢
设计结构特点：由杆端体与GEG..E、GEG..ES、GEG..ES-2RS系列向心关节组装而成，杆端体材料为碳钢，锻造成型，表面镀环保白锌，可以通过油嘴或杆端眼润滑。

Dimensions in mm
Note:For left-hand thread,Please add suffix "L",e.g.SIGL20ES
Sliding contact surfaces:Steel/Steel
Design and application features:
Combination rod end with female thread is made up of a rod end a radial spherical plain bearing of series GEG..E or GEG..ES or GEG..ES-2RS,rod end of steel and zinc coated;Can be lubricated via a nipple or a hole in the rod end,It has characteristic of large load capability,easy mounting and dismounting and mechanism simplification.

SAG...ES..2RS

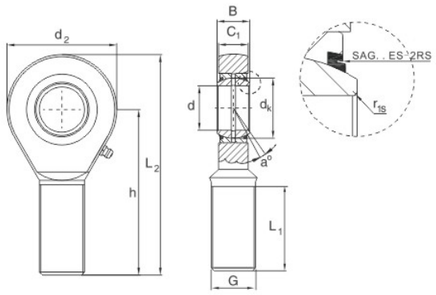

型号 Part No.		尺寸mm Dimensions												负荷KN Load ratings		重量KG Weight
		d 公差	B -0.12	dK	C1 max	D2 max	G 6H	h1	L1 min	L2 max	R1S min	a ≈	dyn. C	stat. C0	Kg≈
SAG4E		4 -0.008	7	10	4.5	21	M5×0.8	36	16	46.5	0.3	20	3.4	8.1	0.011
SAG5E		5 -0.008	9	10	4.5	21	M6×1	36	16	46.5	0.3	21	5.5	8.1	0.017
SAG6E		6 -0.008	9	13	6.5	24	M8×1.25	42	21	54	0.3	21	5.5	12.9	0.024
SAG8E		8 -0.008	11	16	7.5	29	M10×1.5	48	26	62.5	0.3	21	8.1	17.6	0.047
SAG10E		10 -0.008	12	18	8.5	34	M12×1.75	54	28	71	0.3	18	10	24.5	0.072
SAG12ES	SAG12ES2RS	12 -0.008	15	22	10.5	40	M14×2	63	34	83	0.3	18	16	36	0.127
SAG15ES	SAG15ES2RS	15 -0.008	16	25	11.5	46	M16×2	69	36	92	0.3	16	21	45	0.179
SAG17ES	SAG17ES2RS	17 -0.01	20	29	13.5	53	M20×1.5	78	43	104.5	0.3	19	30	60	0.306
SAG20ES	SAG20ES2RS	20 -0.01	25	35.5	18	64	M24×2	94	53	126	0.6	17	48	83	0.538
SAIG25ES	SAG25ES2RS	25 -0.01	28	40.7	20	73	M30×2	110	65	146.5	0.6	17	62	110	0.885
SAIG30ES	SAG30ES2RS	30 -0.012	32	47	22	82	M36×3	140	82	181	0.6	17	79	146	1.48
SAG35ES	SAG35ES2RS	35 -0.012	35	53	24	92	M39×3	150	86	196	0.6	16	99	180	1.96
SAG40ES	SAG40ES2RS	40 -0.012	40	60	28	102	M42×3	163	92	214	0.6	17	127	240	2.69
SAG45ES	SAG45ES2RS	45 -0.012	43	66	31	112	M45×3	185	104	241	0.6	15	156	290	3.75
SAG50ES	SAG50ES2RS	50 -0.015	56	80	39	135	M52×3	210	115	277.5	1	17	245	450	5.83
SAG60ES	SAG60ES2RS	60 -0.015	63	92	43	160	M56×4	235	125	315	1	17	313	610	8.44
SAIG70ES	SAG70ES2RS	70 -0.015	70	105	48	180	M64×4	270	140	360	1	16	400	750	13.52

尺寸单位为毫米
注：如果是左旋螺纹，轴承型号需加“L”,例如：SAGL20ES
滑动磨擦副：钢/钢
设计结构特点：由杆端体与GEG.E、GEG.·ES、GEG..ES-2RS系列向心关节组装而成，杆端体材料为碳钢，锻造成型，表面镀环保白锌，可以通过油嘴或杆端眼润滑。

Dimensions in mm
Note:For left-hand thread,Please add suffix "L",e.g.SAGL20ES
Sliding contact surfaces:Steel/Steel
Design and application features:
Combination rod end with male thread is made up of a rod end a radial spherical plain bearing of series GEG..E or GEG.ES or GEG..ES-2RS,rod end of steel and zinc coated;Can be lubricated via a nipple or a hole in the rod end,It has characteristic of large load capability,easy mounting and dismounting and mechanism simplification.

SI..E(S),SI..ES 2RS

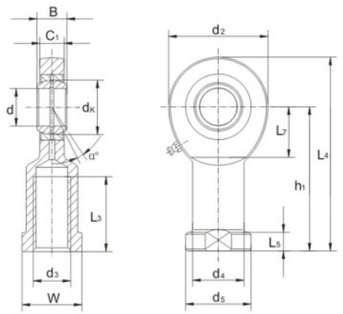

型号 Part No.	尺寸mm Dimensions														负荷KN Load ratings		重量KG Weight
	d	d3 6H	B	C1	L3 min	W	d2	h1	L4	L5	d4	d5	dk	a ≈	动dyn. C0	静stat. C0	Kg≈
SI 6 E*	6	M6X1.0	6	4.4	11	11	21	30	40.5	5	10	13	10	13	3.40	8.15	0.021
SI 8 E*	8	M8X1.25	8	6	15	14	24	36	48	5	12.5	16	13	15	5.5	12.9	0.039
SI 10 E*	10	M10X1.5	9	7	20	17	29	43	57.5	6.5	15	19	16	12	8.15	17.6	0.061
SI 12 E*	12	M12X1.75	10	8	23	19	34	50	67	6.5	17.5	22	18	11	10.8	24.5	0.096
SI 15 ES	15	M14X2.0	12	10	30	22	40	61	81	8	21	26	22	8	17	36	0.18
SI 17 ES	17	M16X2.0	14	11	34	27	46	67	90	10	24	30	25	10	21.2	45	0.22
SI 20 ES	20	M20X1.5	16	13	40	32	53	77	103.5	10	27.5	35	29	9	30	60	0.35
SI 25 ES	25	M24X2.0	20	17	48	36	64	94	126	12	33.5	42	35.5	7	48	83	0.64
SI 30 ES	30	M30X2.0	22	19	56	41	73	110	146.5	15	40	50	40.7	6	62	110	0.93
SI 35 ES	35	M36X3.0	25	21	60	50	82	125	166	15	47	58	47	6	80	146	1.3
SI 40 ES	40	M39X3.0	28	23	65	55	92	142	188	18	52	65	53	7	100	180	2
SI 45 ES	45	M42X3.0	32	27	65	60	102	145	196	20	58	70	60	7	127	240	2.5
SI 50 ES	50	M45X3.0	35	30	68	65	112	160	216	20	62	75	66	6	156	290	3.5
SI 60 ES	60	M52X3.0	44	38	70	75	135	175	242.5	20	70	88	80	6	245	450	5.5
SI 70 ES	70	M56X4.0	49	42	80	85	160	200	280	20	80	98	92	6	315	610	8.6
SI 80 ES	80	M64X4.0	55	47	85	100	180	230	320	25	95	110	105	6	400	750	12

–由杆端体和自润滑向心关节轴承GE..E(S)或者GE..ES 2RS组成。
– SI..ES型杆端体有润滑油孔或者油杯。
–轴承孔径d≥15，可制造–2RS结构，例如:SI 20ES 2RS。
–带“*”的型号均不配油孔或者油杯。
–若是左旋螺纹，则在型号后面，数字前面加L,如SIL 20ES.
–产品默认为锻件。
–杆端体:中碳钢45，表面镀锌处理;内圈和钢球:轴承钢GCr15。

– Rod body is pressed around inner ring.
– Outer race is lined with PTFE composite material.
– For left–hand thread, please add suffix” L" ,e.g. SIL 8PK.
– For fine–pitch thread, please add suffix"FG” , e.g. SI 8 PKFG.
– General with forging part, also turn part is optional.

Material and surface treatments:
–Body:medium carbon steel 45, zinc plating; Steel ball: bearing steel GCr15 without chromium plating; with PTFE;
–Body:stainless steel 304, stainless steel 303 or stainless steel 316 is optional with surface passivation
Steel ball: alternative bearing steel GCr15 with hard chrome plating or stainless steel 440C.

SA..E(S),SA..ES 2RS

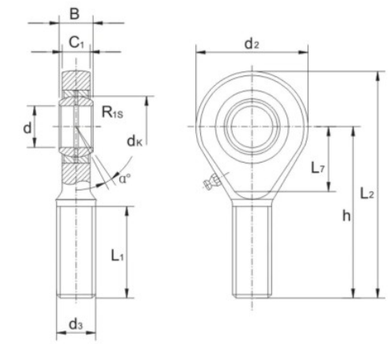

型号 Part No.	尺寸mm Dimensions												负荷KN Load ratings		重量KG Weight
	d	d3 6g	B	C1	L1 min	d2	L7 min	h1	L2	dK	R1S	a ≈	动dyn. C	静 stat. C0	Kg ≈
SA 6 E*	6	M6X1.0	6	4.4	18	21	11	36	46.5	10	0.3	13	3.4	8.15	0.017
SA 8 E*	8	M8X1.25	8	6	22	24	14	42	54	13	0.3	15	5.5	12.9	0.029
SA 10 E*	10	M10X1.5	9	7	26	29	15	48	62.5	16	0.3	12	8.15	17.6	0.051
SA 12 E*	12	M12X1.75	10	8	28	34	17	54	71	18	0.3	11	10.8	24.5	0.086
SA 15 ES	15	M14X2.0	12	10	34	40	20	63	83	22	0.3	8	17	36	0.14
SA 17 ES	17	M16X2.0	14	11	36	46	23	69	92	25	0.3	10	21.2	45	0.19
SA 20 ES	20	M20X1.5	16	13	43	53	27	78	104.5	29	0.6	9	30	60	0.31
SA 25 ES	25	M24X2.0	20	17	53	64	32	94	126	35.5	0.6	7	48	83	0.56
SA 30 ES	30	M30X2.0	22	19	65	73	37	110	146.5	40.7	0.6	6	62	110	0.89
SA 35 ES	35	M36X3.0	25	21	82	82	41	140	181	47	0.6	6	80	146	1.4
SA 40 ES	40	M39X3.0	28	23	86	92	46	150	196	53	0.6	7	100	180	1.8
SA 45 ES	45	M42X3.0	32	27	94	102	51	163	214	60	0.6	7	127	240	2.6
SA 50 ES	50	M45X3.0	35	30	107	112	56	185	241	66	0.6	6	156	290	3.4
SA 60 ES	60	M52X3.0	44	38	115	135	68	210	277.5	80	1	6	245	450	5.9
SA 70 ES	70	M56X4.0	49	42	125	160	80	235	315	92	1	6	315	610	8.2
SA 80 ES	80	M64X4.0	55	47	140	180	90	270	360	105	1	6	400	750	12

–由杆端体和自润滑向心关节轴承GE..E(S)或者GE..ES 2RS组成。
–SI..ES型杆端体有润滑油孔或者油杯。
–轴承孔径d≥15，可制造–2RS结构，例如: SA 20 ES 2RS。
–带“*”的型号均不配油孔或者油杯。
–若是左旋螺纹，则在型号后面，数字前面加L,如SAL 20ES.
–产品默认为锻件。
–杆端体:中碳钢45，表面镀锌处理;内圈和钢球:轴承钢GCr15.

Material and surface treatments:
– It is made up of a radial spherical plain bearing GE..E(S) or GE..ES 2RS and rod body.
– Rod body of SI..ES with a lubricating hole or a grease nipple.
– For bearings d215, SI..ES 2RS also available, e.g. SA 20 ES 2RS.
– Lubricating hole or grease nipple isn't available for the sizes marked * *.
– For left–hand thread, please add suffix "L" ,e.g.SAL 20ES.
– All with forging part.

– Body: medium carbon steel 45, zinc plating; Inner ring and steel ball: both bearing steel GCr15.

SI...C...ET-2RS

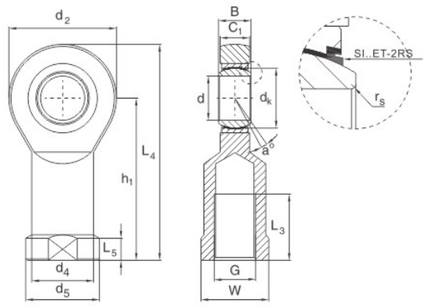

型号 Part No.		尺寸mm Dimensions															负荷KN Load ratings		径向游隙	重量KG Weight
		d 公差	B	dK	C1 max	d2 max	G 6H	h1	L3 min	L4 max	L5	W	d4	d5	Rs min	a ≈	dyn. C	stat. C0	Radial clearance mm	Kg≈
SI5C		5-0.008	6	10	4.5	21	M5x0.8	30	11	40.5	5	10	10	13	0.3	13	3.6	8.1	0～0.032	0.016
SI6C		6-0.008	6	10	4.5	21	M6x1	30	11	40.5	5	11	11	13	0.3	13	3.6	8.1	0～0.032	0.017
SI8C		8-0.008	8	13	6.5	24	M8x1.25	36	15	48	5	13	13	16	0.3	15	5.8	123	0～0.032	0.035
SI10C		10-0.008	9	16	7.5	29	M10x1.5	43	15	57.5	6.5	16	16	19	0.3	12	8.6	17.6	0～0.032	0.061
SI12C		12-0.008	10	18	8.5	34	M12x1.75	50	18	67	7	18	19	22	0.3	10	11	24.5	0～0.032	0.096
SI15C	SI15ET2RS	12-0.008	12	22	10.5	40	M14x2	61	21	81	8	21	21	26	0.3	8	18	36	0～0.04	0.16
SI17C	SI17ET2RS	17-0.008	14	25	11.5	46	M16x2	67	24	90	10	27	25	29	0.3	10	22	45	0～0.04	0.23
SI20C	SI20ET2RS	20-0.01	16	29	13.5	53	M20×1.5	77	30	103.5	10	30	28	34	0.3	9	31	60	0～0.04	0.32
SI25C	SI25ET2RS	25-0.01	20	35.5	18	64	M24×2	94	36	126	12	36	35	42	0.6	7	51	83	0～0.05	0.62
SI30C	SI30ET2RS	30-0.01	22	40.7	20	73	M30×2	110	45	146.5	15	46	42	50	0.6	6	65	110	0～0.05	0.97
	SI35ET2RS	35-0.012	25	47	22	82	M36×3	125	60	166	15	55	48	58	0.6	6	112	146	0～0.05	1.5
	SI40ET2RS	40-0.012	28	53	24	92	M39×3	142	65	188	18	60	52	65	0.6	7	140	180	0～0.06	2.1
	SI45ET2RS	45-0.012	32	60	28	102	M42×3	145	65	196	20	65	58	70	0.6	7	180	240	0～0.06	2.7
	SI50ET2RS	50-0.012	35	66	31	112	M45×3	160	68	216	20	70	62	75	0.6	6	220	290	0～0.06	3.5
	SI60ET2RS	60-0.015	44	80	39	135	M52×3	175	70	242.5	20	80	70	88	1	6	345	450	0～0.06	5.6
	SI70ET2RS	70-0.015	49	92	43	160	M56×4	200	80	280	20	85	80	98	1	6	440	610	0～0.072	8.3
	SI80ET2RS	80-0.015	55	105	48	180	M64×4	230	85	320	25	95	95	110	1	6	567	750	0～0.072	13

尺寸单位为毫米.
注：如果是左旋螺纹，轴承型号需加“L”，例如：SIL20C
滑动磨擦副：钢对复合材料(d≤30) 钢对PTFE织物（d≥15)
设计结构特点：由杆端体与GE..C、GE..ET-2RS系列向心关节轴承组装而成，杆端体材料为碳钢，
锻造成 型，表面镀环保白锌，与SI..E、SI..ES系列尺寸相同润滑方式不同。

Dimensions in mm
Note:For left-hand thread,Please add suffix "L",e.g.SIL20C
Sliding contact surfaces:Steel/BPTFE composite material(d<30)Steel/PTFE fabfric(d-15)
Design and application features:
Combination rod end with male or female thread is made up of a rod end a radial spherical plain bearing of series GE.Eor GE..ET-2RS,rod end of steel and zinc coated;Can be lubricated via a nipple or a hole in the rod end,It has characteristic of large load capability,easy mounting and dismounting and mechanism simplification.

SA...C...ET-2RS

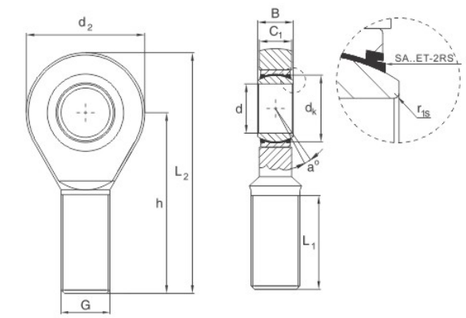

型号 Part No.		尺寸mm Dimensions											负荷KN Load ratings		径向游隙	重量KG Weight
		d 公差	B	dK	C1 max	d2 max	G 6H	h1	L1 min	L2 max	Rs min	a ≈	dyn. C	stat. C0	Radial clearance mm	Kg≈
SA5C		5-0.008	6	10	4.5	21	M5x0.8	36	16	46.5	0.3	13	3.6	8.1	0～0.032	0.011
SA6C		6-0.008	6	10	4.5	21	M6x1	36	16	46.5	0.3	13	3.6	8.1	0～0.032	0.013
SA8C		8-0.008	8	13	6.5	24	M8x1.25	42	21	54	0.3	15	53	12.9	0～0.032	0.026
SA10C		10-0.008	9	16	7.5	29	M10x1.5	48	26	62.5	0.3	12	8.6	17.6	0～0.032	0.044
SA12C		12-0.008	10	18	8.5	34	M12x1.75	54	28	71	0.3	10	11	24.5	0～0.032	0.066
SA15C	SA15ET2RS	12-0.008	12	22	10.5	40	M14x2	63	34	83	0.3	8	18	36	0～0.04	0.12
SA17C	SA17ET2RS	17-0.008	14	25	11.5	46	M16x2	69	36	92	0.3	10	22	45	0～0.04	0.17
SA20C	SA20ET2RS	20-0.01	16	29	13.5	53	M20×1.5	78	43	104.5	0.3	9	31	60	0～0.04	0.28
SA25C	SA25ET2RS	25-0.01	20	35.5	18	64	M24×2	94	53	126	0.6	7	51	83	0～0.05	0.51
SA30C	SA30ET2RS	30-0.01	22	40.7	20	73	M30×2	110	65	146.5	0.6	6	65	110	0～0.05	0.84
	SA35ET2RS	35-0.012	25	47	22	82	M36×3	140	82	181	0.6	6	112	146	0～0.05	1.4
	SA40ET2RS	40-0.012	28	53	24	92	M39×3	150	86	196	0.6	7	140	180	0～0.06	1.8
	SA45ET2RS	45-0.012	32	60	28	102	M42×3	163	92	214	0.6	7	180	240	0～0.06	2.5
	SA50ET2RS	50-0.012	35	66	31	112	M45×3	185	104	241	0.6	6	220	290	0～0.06	3.6
	SA60ET2RS	60-0.015	44	80	39	135	M52×3	210	115	277.5	1	6	345	450	0～0.06	5.7
	SA70ET2RS	70-0.015	49	92	43	160	M56×4	235	125	315	1	6	440	610	0～0.072	7.7
	SA80ET2RS	80-0.015	55	105	48	180	M64×4	270	140	360	1	6	567	750	0～0.072	12

尺寸单位为毫米.
注：如果是左旋螺纹，轴承型号需加“L”，例如：SAL20C
滑动磨擦副：钢对复合材料(d≤30) 钢对PTFE织物（d≥15)
设计结构特点：由杆端体与GE..C、GE..ET-2RS系列向心关节轴承组装而成，
杆端体材料为碳钢，锻造成 型，表面镀环保白锌，与SI..E、SI..ES系列尺寸相同润滑方式不同。

Dimensions in mm
Note:For left-hand thread,Please add suffix "L",e.g.SAL20C
Sliding contact surfaces:Steel/PTFE composite material(d<30)Steel/PTFE fabfric(d=15)
Design and application features:
Combination rod end with male or male thread is made up of a rod end a radial spherical plain bearing of series GE..Eor GE..ET-2RS,rod end of steel and zinc coated;Can be lubricated via a nipple or a hole in the rod end,It has characteristic of large load capability,easy mounting and dismounting and mechanism simplification.

注塑杆端关节轴承

Injection molded rod ends

PNF

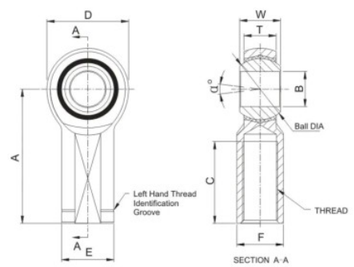

型号 Part No.	尺寸mm Dimensions											重量KG Weight
	N Thread UNF-2B	A ±0.015	B 0.0025 -0.0005	C 0.062 -0.031	D ±0.010	E ±0.010	F 0.002 -0.01	T ±0.005	W +0.000 -0.005	Ball DIA S□ REF	a° ANGLE	Kg≈
PNF3	10-32	1.062	0.19	0.562	0.625	0.406	0.312	0.25	0.312	0.437	13	0.018
PNF4	1/4-28	1.312	0.25	0.75	0.75	0.469	0.375	0.281	0.375	0.5	16	0.027
PNF5	5/16-24	1.375	0.3125	0.75	0.875	0.5	0.437	0.344	0.437	0.625	14	0.036
PNF6	3/8-24	1.625	0.375	0.937	1	0.687	0.562	0.406	0.5	0.719	12	0.063
PNF7	7/16-20	1.812	0.4375	1.062	1.125	0.75	0.625	0.437	0.562	0.812	14	0.086
PNF8	1/2-20	2.125	0.5	1.187	1.312	0.875	0.75	0.5	0.625	0.937	12	0.14
PNF10	5/8-18	2.5	0.625	1.5	1.5	1	0.875	0.562	0.75	1.125	16	0.204
PNF12	3/4-16	2.875	0.75	1.75	1.75	1.125	1	0.687	0.875	1.312	14	0.304

注塑杆端关节轴承材料和表面处理方式:

–座体:中碳钢45，表面镀锌处理。可选择不锈钢材质，表面钝化。

–钢球:轴承钢GCr15,镀硬铬。可选择440C不锈钢。

–内圈:复合尼龙。

–若是左旋螺纹，则在型号后面，数字前面加L,如PNFL 8.

Material and surface treatments:

– Body: medium carbon steel 45.Zinc plating.Alternative stainless steel with surface passivation.

– Steel ball: bearing steel GCr15.Hard chrome plating.Alternative stainless steel 440C.

– Race: nylon.

– For left-hand thread, please add suffix "L" ,e.g.PNFL 8.

注塑杆端关节轴承

Injection molded rod ends

PNM

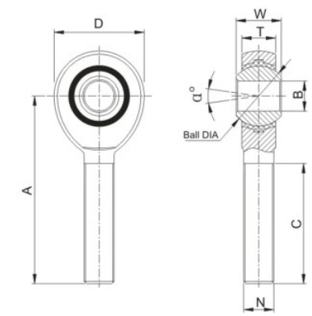

型号 Part No.	尺寸mm Dimensions								负荷KN Load ratings	重量KG Weight
	N Thread UNF-2B	A ±0.015	B 0.0025 -0.0005	C 0.062 -0.031	D ±0.010	T ±0.005	W +0.000 -0.005	Ball DIA S□ REF	a° Misalignment Angle	Kg≈
PNM3	10-32	1.25	0.19	0.75	0.625	0.25	0.312	0.437	13	0.009
PNM4	1/4-28	1.562	0.25	1	0.75	0.281	0.375	0.5	16	0.018
PNM5	5/16-24	1.875	0.3125	1.25	0.875	0.344	0.437	0.625	14	0.032
PNM6	3/8-24	1.938	0.375	1.25	1	0.406	0.5	0.719	12	0.05
PNM7	7/16-20	2.125	0.4375	1.375	1.125	0.437	0.562	0.812	14	0.068
PNM8	1/2-20	2.438	0.5	1.5	1.312	0.5	0.625	0.937	12	0.104
PNM10	5/8-18	2.625	0.625	1.625	1.5	0.562	0.75	1.125	16	0.163
PNM12	3/4-16	2.875	0.75	1.75	1.75	0.687	0.875	1.312	14	0.258

材料和表面处理方式:

–座体:中碳钢45，表面镀锌处理。可选择不锈钢材料，表面钝化处理。

–钢球:轴承钢GCr15，镀硬铬。可选择440C不锈钢。

–内圈:复合尼龙。

–若是左旋螺纹，则在型号后面，数字前面加L,如PNML 8.

Material and surface treatments:

– Body: medium carbon steel 45 , Zinc plating.Alternative stainless steel with surface passivation.

– Steel ball: bearing steel GCr15 , Hard chrome plating.Alternative stainless steel 440C.

– Race: nylon.

– For left-hand thread , please add suffix "L" , e.g.PNML 8.

高载荷注塑杆端关节轴承

High Load Injection Molded Rod Ends

PXF

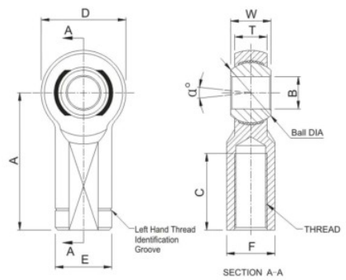

型号 Part No.	尺寸mm Dimensions											重量KG Weight
	B +0.0015 -0.0005	W ±0.005	T ±0.005	A ±0.015	D ±0.010	E ±0.010	F ±0.010	Ball DIA REF	C +0.062 -0.031	Thread UNF-2B	a° ANGLE	Kg≈
PXF3	0.1900	0.312	0.250	1.062	0.625	0.406	0.312	0.437	0.562	10-32	13	0.018
PXF4	0.2500	0.375	0.281	1.312	0.750	0.469	0.375	0.500	0.750	1/4-28	16	0.027
PXF5	0.3125	0.437	0.344	1.375	0.875	0.500	0.437	0.625	0.750	5/16-24	14	0.041
PXF6	0.3750	0.500	0.406	1.625	1.000	0.687	0.562	0.719	0.937	3/8-24	12	0.063
PXF7	0.4375	0.562	0.437	1.812	1.125	0.750	0.625	0.812	1.062	7/16-20	14	0.086
PXF8	0.5000	0.625	0.500	2.125	1.312	0.875	0.750	0.937	1.187	1/2-20	12	0.140
PXF10	0.6250	0.750	0.562	2.500	1.500	1.000	0.875	1.125	1.500	5/8-18	16	0.204
PXF12	0.7500	0.875	0.687	2.875	1.750	1.125	1.000	1.312	1.750	3/4-16	14	0.313
PXF16	1.0000	1.375	1.000	4.125	2.750	1.625	1.500	1.875	2.125	11/4-12	17	0.957
PXF16-1	1.0000	1.375	1.000	4.125	2.750	1.625	1.500	1.875	2.125	1-14	17	1.17
PXF16-2	1.0000	1.375	1.000	4.125	2.750	1.625	1.500	1.875	2.125	1-12	17	1.17

材料和表面处理方式:

–座体:合金钢35CrMo，表面调质处理。可选择不锈钢材质，表面钝化处理。

–钢球:轴承钢GCr15，镀硬铬。可选择440C不锈钢。

–内圈:复合尼龙。

–若是左旋螺纹,则在型号后面，数字前面加L,如PXFL 8.

Material and surface treatments:

– Body: alloy steel 35CrMo with heat treating. Alternative stainless steel with surface passivation.

– Steel ball: bearing steel GCr15 with hard chrome plating. Alternative stainless steel 440C.

– Race: nylon.

– For left-hand thread, please add suffix “L” , e.g.PXFL 8.

高载荷注塑杆端关节轴承

High Load Injection Molded Rod Ends

PXM

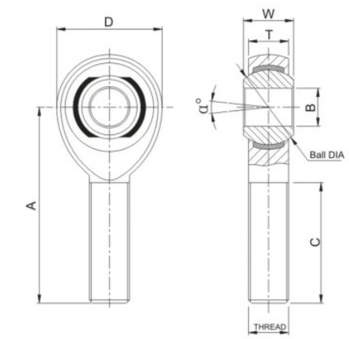

型号 Part No.	尺寸mm Dimensions									重量KG Weight
	B +0.0015 -0.0005	W ±0.005	T ±0.005	A ±0.015	D ±0.010	Ball DIA REF	C +0.062 -0.031	Thread UNF-2B	a° Misalignment Angle	Kg≈
PXM3	0.1900	0.312	0.25	1.25	0.625	0.437	0.75	10-32	13	0.013
PXM4	0.2500	0.375	0.281	1.562	0.75	0.5	1	1/4-28	16	0.018
PXM4-5	0.2500	0.375	0.281	1.875	0.875	0.5	1.25	5/16-24	13	0.032
PXM5	0.3125	0.437	0.344	1.875	0.875	0.625	1.25	5/16-24	14	0.032
PXM5-6	0.3125	0.437	0.344	1.938	1	0.625	1.25	3/8-24	12	0.05
PXM6	0.3750	0.500	0.406	1.938	1	0.719	1.25	3/8-24	12	0.05
PXM6-7	0.3750	0.500	0.406	2.125	1.125	0.719	1.375	7/16-20	10	0.068
PXM7	0.4375	0.562	0.437	2.125	1.125	0.812	1.375	7/16-20	14	0.068
PXM7-8	0.4375	0.562	0.437	2.438	1.312	0.812	1.5	1/2-20	12	0.11
PXM8	0.5000	0.625	0.5	2.438	1.312	0.937	1.5	1/2-20	12	0.11
PXM8-10	0.5000	0.625	0.5	2.625	1.5	0.937	1.625	5/8-18	10	0.163
PXM8-12	0.5000	0.750	0.562	2.875	1.75	0.937	1.75	3/4-16	16	0.19
PXM10	0.6250	0.750	0.562	2.625	1.5	1.125	1.625	5/8-18	16	0.163
PXM10-12	0.6250	0.750	0.562	2.875	1.75	1.125	1.75	3/4-16	13	0.258
PXM12	0.7500	0.875	0.687	2.875	1.75	1.312	1.75	3/4-16	14	0.258
PXM12-14	0.7500	0.875	0.687	3.375	2	1.312	1.875	7/8-14	12	0.399
PXM14	0.8750	0.875	0.765	3.375	2	1.375	2	7/8-14	7	0.399
PXM16	1.0000	1.375	1	4.125	2.75	1.875	2.125	11/4-12	17	1.093
PXM16-1	1.0000	1.375	1	4.125	2.75	1.875	2.125	1-14	17	0.966
PXM16-2	1.0000	1.375	1	4.125	2.75	1.875	2.125	1-12	17	0.966

材料和表面处理方式:

–座体:合金钢35CrMo，表面调质处理。可选择不锈钢材质，表面钝化处理。

–钢球:轴承钢GCr15，镀硬铬。可选择440C不锈钢。

–内圈:复合尼龙。

–若是左旋螺纹，则在型号后面，数字前面加L,如PXML 8.

Material and surface treatments:

– Body: alloy steel 35CrMo with heat treating. Alternative stainless steel with surface passivation.

– Steel ball: bearing steel GCr15 with hard chrome plating. Alternative stainless steel 440C

– Race: nylon.

– For left-hand thread, please add suffix “L” , e.g. PXML 8.

BRF

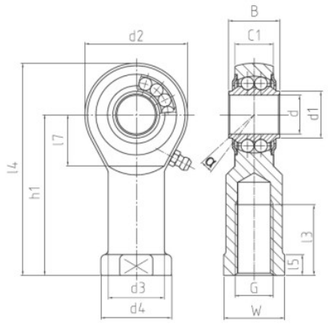

型号 Part No.	Rechtsgewinde right hand thread	Linksgewinde left hand thread	d	G	B	C1	h1	d1	d2	d3	d4	l3	l4	l5
BRF06-00	-501	-502	6	M6x1	9	6.75	30	9	20	10	13	12	40	5
BRF08-00	-501	-502	8	M8x1.25	12	9	36	10.5	24	12.5	16	16	48	5
BRF10-00	-501	-502	10	M10x1.5	14	10.5	43	12	28	15	19	20	57	6.5
BRF10-01	-501	-502	10	M10C×1.25	14	10.5	43	12	28	15	19	20	57	6.5
BRF12-00	-501	-502	12	M12x1.75	16	12	50	14.5	32	17.5	22	22	66	6.5
BRF12-01	-501	-502	12	M12×1.25	16	12	50	14.5	32	17.5	22	22	66	6.5
BRF14-00	-501	-502	14	M14x2	19	13.5	57	17	36	20	25	25	75	8
BRF16-00	-501	-502	16	M16x2	21	15	64	19	42	22	27	28	85	8
BRF16-01	-501	-502	16	M16×1.5	21	15	64	19	42	22	27	28	85	8
BRF18-00	-501	-502	18	M18×1.5	23	16.5	71	24.5	46	25	31	32	94	10
BRF20-00	-501	-502	20	M20×1.5	25	18	71	24.5	50	27.5	34	33	102	10
BRF22-00	-501	-502	22	M22×1.5	28	20	84	26	54	30	38	37	111	12
BRF25-00	-501	-502	25	M24×2	31	22	94	29.5	64	30	35	42	126	10
BRF30-00	-501	-502	30	M30×2	37	25	110	34.5	70	40	50	51	145	15

高速杆端关节轴承BRF系列是内螺纹可润滑，低维护，屏蔽适配器尺寸符合DIN648，K系列，带整体调心球轴承的重型杆端
A = 径向游隙 : 10 – 30 μ m, 低摩擦力
B = 内圈材料为硬化轴承钢，因为偏转角限制，保护肩及保护壳均为精加工
C = 两侧防尘罩
D = 连杆外壳全部为锻钢, 表面硬化
E = 长期保持润滑状态保证了低维护，特别适用于高速大转角以及高速旋转的场合

High speed rod ends BRF series are internally threaded lubricable, low maintenance, shielded adapters sized to DIN648, K series, heavy duty rod ends with integral self-aligning ball bearings
A = radial play: 10 – 30 μ m, low friction
B = inner ring material is hardened bearing steel, due to deflection angle limitation, protective shoulder and protective shell are finish machined
C = Dust cover on both sides
D = Connecting rod housing all forged steel, case hardened
E = Long-term lubricated state ensures low maintenance, especially suitable for high-speed, large-angle and high-speed rotation

BRM

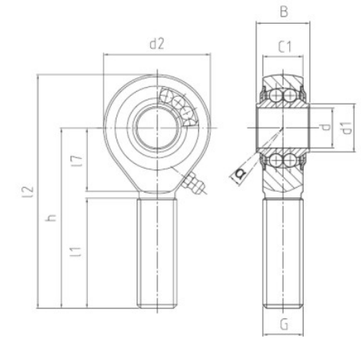

型号 Part No.	Rechtsgewinde right hand thread	Linksgewinde left hand thread	d	G	B	C1	h	d1	d2	l1	l2	l7
BRM06-00	-501	-502	6	M6×1	9	6.75	36	9	20	22	46	12
BRM08-00	-501	-502	8	M8×1.25	12	9	42	10.5	24	25	54	15
BRM10-00	-501	-502	10	M10×1.5	14	10.5	48	12	28	29	62	15
BRM12-00	-501	-502	12	M12×1.75	16	12	54	14.5	32	33	70	19
BRM14-00	-501	-502	14	M14×2	19	13.5	60	17	36	36	78	20
BRM16-00	-501	-502	16	M16×2	21	15	66	19	42	40	87	22
BRM18-00	-501	-502	18	M18×1.5	23	16.5	72	21.5	46	44	95	25
BRM20-00	-501	-502	20	M20×1.5	25	18	78	24.5	50	47	103	28
BRM22-00	-501	-502	22	M22×1.5	28	20	84	26	54	51	111	26
BRM25-00	-501	-502	25	M24×2	31	22	94	29.5	64	57	126	30
BRM30-00	-501	-502	30	M30×2	37	25	110	34.5	70	66	145	34

高速杆端关节轴承BRM系列是外螺纹可润滑，低维护，屏蔽适配器尺寸符合DIN648，K系列，带整体调心球轴承的重型杆端
A = 径向游隙 : 10 – 30 μ m, 低摩擦力
B = 内圈材料为硬化轴承钢，因为偏转角限制，保护肩及保护壳均为精加工
C = 两侧防尘罩
D = 连杆外壳全部为锻钢, 表面硬化
E = 长期保持润滑状态保证了低维护，特别适用于高速大转角以及高速旋转的场合

High speed rod ends BRM series are externally threaded lubricable, low maintenance, shielded adapters sized to DIN648, K series, heavy duty rod ends with integral self-aligning ball bearings
A = radial play: 10 – 30 μ m, low friction
B = inner ring material is hardened bearing steel, due to deflection angle limitation, protective shoulder and protective shell are finish machined
C = Dust cover on both sides
D = Connecting rod housing all forged steel, case hardened
E = Long-term lubricated state ensures low maintenance, especially suitable for high-speed, large-angle and high-speed rotation

向心关节轴承

Radial spherical plain bearing

GE..E/ GE..ES / GE..ES-2RS

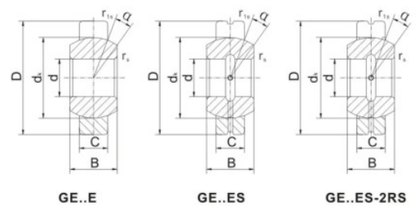

型号 Part No.	尺寸mm Dimensions								负荷KN Load ratings		重量KG Weight
	d	D	B	C	dK	Rs min	R1s min	a ≈	dyn. C	stat. C0	Kg≈
GE4E	4	12	5	3	8	0.3	0.3	16	2	10	0.003
GE5E	5	14	6	4	10	0.3	0.3	13	3.4	17	0.005
GE6E	6	14	6	4	10	0.3	0.3	13	3.4	17	0.004
GE8E	8	16	8	5	13	0.3	0.3	15	5.5	27	0.008
GE10E	10	19	9	6	16	0.3	0.3	12	8.1	40	0.011
GE12E	12	22	10	7	18	0.3	0.3	10	10	53	0.015
GE15ES GE15ES-2RS	15	26	12	9	22	0.3	0.3	8	16	84	0.027
GE17ES GE17ES-2RS	17	30	14	10	25	0.3	0.3	10	21	106	0.041
GE20ES GE20ES-2RS	20	35	16	12	29	0.3	0.3	9	30	146	0.066
GE25ES GE25ES-2RS	25	42	20	16	35.5	0.6	0.6	7	48	240	0.119
GE30ES GE30ES-2RS	30	47	22	18	40.7	0.6	0.6	6	62	310	0.153
GE35ES GE35ES-2RS	35	55	25	20	47	0.6	1	6	79	399	0.233
GE40ES GE40ES-2RS	40	62	28	22	53	0.6	1	7	99	495	0.306
GE45ES GE45ES-2RS	45	68	32	25	60	0.6	1	7	127	637	0.427
GE50ES GE50ES-2RS	50	75	35	28	66	0.6	1	6	156	780	0.546
GE55ES GE55ES-2RS	55	85	40	32	74	0.6	1	7	200	1000	0.939
GE60ES GE60ES-2RS	60	90	44	36	80	1	1	6	245	1220	1.04
GE70ES GE70ES-2RS	70	105	49	40	92	1	1	6	313	1560	1.55
GE80ES GE80ES-2RS	80	120	55	45	105	1	1	6	400	2000	2.31
GE90ES GE90ES-2RS	90	130	60	50	115	1	1	5	488	2440	2.75
GE100ES GE100ES-2RS	100	150	70	55	130	1	1	7	607	3030	4.45
GE110ES GE110ES-2RS	110	160	70	55	140	1	1	6	654	3270	4.82
GE120ES GE120ES-2RS	120	180	85	70	160	1	1	6	950	4750	8.05
GE140ES GE140ES-2RS	140	210	90	70	180	1	1	7	1070	5350	11.02
GE160ES GE160ES-2RS	160	230	105	80	200	1	1	8	1360	6800	14.01
GE180ES GE180ES-2RS	180	260	105	80	225	1.1	1.1	6	1530	7650	18.65
GE200ES GE200ES-2RS	200	290	130	100	250	1.1	1.1	7	2120	10600	28.03

尺寸单位为毫米. 滑动磨擦副:钢/钢

设计结构特点:单缝外圈向心关节轴承，外圈有一道轴向缝，内外圈材料均为轴承钢，淬火，高温磷化，滑动表面涂敷二硫化钼，具有耐磨损，抗腐蚀，自调心的特点，适用于承受径向重载和任一方向不大的轴向载荷。其特点与GE..ES系列相同，但内圈两端带有突出的圆筒，适合于将内圈和挡圈做成一体的安装均合。带“*”标识产品只有外圈有润滑油槽和油孔。

– Sliding contact surfaces: steel / steel.

- Both outer and inner rings are ball bearing steels, with proper phosphate treatment.
- Outer ring with single split in axial direction.
- Lubricating grooves and holes in the outer and inner rings of type ES.
- Outer ring of type 2RS with lip seals in both sides.

油润滑向心关节轴承

Oil Lubricated Radial Spherical Plain Bearings

GEG..E/GEG..ES-2RS

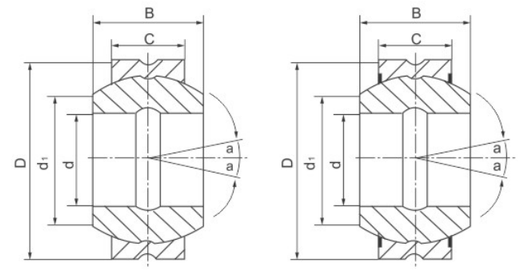

型号 Part No.	尺寸mm Dimensions									负荷KN Load ratings		重量KG Weight
	d	D	B	C	dK	d1	R1s min	R2s min	a ≈	dyn. C	stat. C0	Kg≈
GEG4E	4	14	7	4	10	7	0.3	0.3	20	3.4	17	0.005
GEG5E	5	16	9	5	13	8	0.3	0.3	21	5.5	27	0.008
GEG6E	6	16	9	5	13	9	0.3	0.3	21	5.5	27	0.006
GEG8E	8	19	11	6	16	11	0.3	0.3	21	8.1	40	0.014
GEG10E	10	22	12	7	18	13	0.3	0.3	18	10	53	0.021
GEG12E GEG12ES-2RS	12	26	15	9	22	16	0.3	0.3	18	16	84	0.033
GEG15ES GEG15ES-2RS	15	30	16	10	25	19	0.3	0.3	16	21	106	0.049
GEG17ES GEG17ES-2RS	17	35	20	12	29	21	0.3	0.3	19	30	146	0.083
GEG20ES GEG20ES-2RS	20	42	25	16	35.5	24	0.3	0.3	17	48	240	0.153
GEG25ES GEG25ES-2RS	25	47	28	18	40.7	29	0.6	0.6	17	62	310	0.203
GEG30ES GEG30ES-2RS	30	55	32	20	47	34	0.6	1	17	79	399	0.304
GEG35ES GEG35ES-2RS	35	62	35	22	53	39	0.6	1	16	99	495	0.408
GEG40ES GEG40ES-2RS	40	68	40	25	60	44	0.6	1	17	127	637	0.542
GEG45ES GEG45ES-2RS	45	75	43	28	66	50	0.6	1	15	156	780	0.713
GEG50ES GEG50ES-2RS	50	90	56	36	80	57	0.6	1	17	245	1220	1.14
GEG55ES GEG55ES-2RS	60	105	63	40	92	67	0.6	1	17	313	1560	2.05
GEG60ES GEG60ES-2RS	70	120	70	45	105	77	0.6	1	16	400	2000	3.01
GEG70ES GEG70ES-2RS	80	130	75	50	115	87	1	1	14	488	2440	3.64
GEG80ES GEG80ES-2RS	90	150	85	55	130	98	1	1	15	607	3030	5.22
GEG90ES GEG90ES-2RS	100	160	85	55	140	110	1	1	14	645	3270	6.05
GEG100ES GEG100ES-2RS	110	180	100	70	160	122	1	1	12	950	4750	9.68
GEG110ES GEG110ES-2RS	120	210	115	70	180	132	1	1	16	1070	5350	14.01
GEG120ES GEG120ES-2RS	140	230	130	80	200	151	1	1	16	1360	6800	19.01
GEG140ES GEG140ES-2RS	160	260	135	80	225	176	1.1	1.1	16	1530	7650	20.02
GEG160ES GEG160ES-2RS	180	290	155	100	250	196	1.1	1.1	14	2120	10600	32.21
GEG180ES GEG180ES-2RS	200	320	165	100	275	220	1.1	1.1	15	2320	11600	45.28
GEG200ES GEG200ES-2RS	220	340	175	100	300	243	1.1	1.1	16	2550	12700	51.12
GEG220ES GEG220ES-2RS	240	370	190	110	325	263	1.1	1.1	15	3030	15190	65.12
GEG240ES GEG240ES-2RS	260	400	205	120	350	285	1.1	1.1	15	3570	17850	82.44
GEG280ES GEG280ES-2RS	280	430	210	120	375	310	1.1	1.1	15	3800	19100	97.21

尺寸单位为毫米. 滑动磨擦副:钢/钢

设计热基疼的单维外图向心苦共护承的圈一道转向售。外周材料均为镇承钢。这火。。易快增动表而款化:有的权。有是的特点具有比GE系列更大的内外圈厚度适合更大摆角和更大负荷，其特点与GE系列相同.

Dimensionsin mm Sliding contact surfaces: Steel/Stee

Design and application features :

GEG...E :As series GE..E, but with wider inner ting and larger outside diameter, for bearing arrangement where a larger angle of tilt is needed, suitable for larger loads mechanism. GEG.. ES:As series GE..ES,but with wider inner ring and larger outsider diameter, for bearing arrangement where a large angle If tilt is needed, suitable for larger loads mechanism. GEG..ES-2RS:As series GE..ES-2RS,but with wider inner ring and larger outsider outside diameter.for bearing arranoement whea a laroer andle if fit is needed. suitable for laroer loads mechanism. or a hole in the rod end. has characteristics oflarge load capability, easy mounting and dismounting and mechanism simplification.

COM../HCOM..

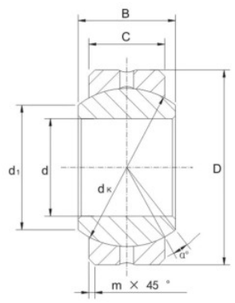

型号 Part No.	尺寸mm Dimensions								负荷KN Load ratings	重量KG Weight
	d	d1	B	C	D	dk	m	a ≈		Kg≈
COM 3	4.826	7.44	7.14	5.54	14.29	10.31	0.381	11	14.464	0.006
COM 4	6.35	9.25	8.71	6.35	16.67	12.7	0.56	13.5	22.015	0.01
COM 5	7.938	10.64	9.53	7.14	19.05	14.27	0.81	12	28.8	0.014
COM 6	9.525	13.11	10.31	7.92	20.64	16.66	0.81	10	37.361	0.017
COM 7	11.113	13.46	11.1	8.71	23.02	17.45	0.81	8	42.048	0.021
COM 8	12.7	16.26	12.7	9.91	25.4	20.65	0.81	9.5	58.934	0.029
COM 9	14.288	18.03	14.27	11.1	27.78	23.01	0.81	9.5	73.967	0.039
COM 10	15.875	19.81	15.88	12.7	30.16	25.4	0.81	8.5	94.658	0.05
COM 12	19.05	23.37	19.05	15.06	36.51	30.15	1.12	9	141.982	0.093
COM 14	22.225	24.89	22.23	17.86	39.69	33.32	1.12	9.5	186.639	0.119
COM 16	25.4	28.4	25.4	20.24	44.45	38.1	1.12	10	245.534	0.175
HCOM 16	25.4	34.54	25.4	19.84	50.8	42.85	0.81	9	315.01	0.251
HCOM 19	30.163	40.89	30.15	23.8	60.33	50.8	0.81	8.5	448.049	0.406
HCOM 20	31.75	40.89	30.15	23.8	60.33	50.8	0.81	8.5	448.049	0.406
HCOM 24	38.1	47.24	34.93	27.79	69.85	58.72	0.81	8.5	604.71	0.616
HCOM 28	44.45	53.59	39.67	31.75	79.38	66.68	1.12	8	784.495	0.884
HCOM 32	50.8	59.94	44.45	34.93	88.9	74.6	1.12	8.5	965.485	1.198

–滑动摩擦面:钢/钢
–外圈材料为碳钢;内圈材料为轴承钢GCr15,镀硬铬
–外圈挤压成型
–外圈有润滑油槽和油孔
–英制系列

– Sliding contact surfaces: steel / steel.
– Outer ring is carbon steel; Inner ring is bearing steel GCr15 with hard chrome plating.
– Outer ring is pressed around inner ring.
– Lubricating groove and holes in the outer ring.
– Dimensions in inches.

COM../HCOM..T

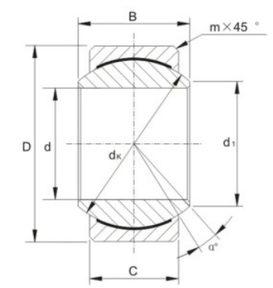

型号 Part No.	尺寸mm Dimensions								负荷KN Load ratings	重量KG Weight
	d	d1	B	C	D	dk	m	a ≈		Kg≈
COM 3 T	4.826	7.44	7.14	5.54	14.29	10.31	0.381	11	21.68	0.006
COM 4 T	6.35	9.25	8.71	6.35	16.67	12.7	0.56	13.5	33.02	0.01
COM 5 T	7.938	10.64	9.53	7.14	19.05	14.27	0.81	12	43.2	0.014
COM 6 T	9.525	13.11	10.31	7.92	20.64	16.66	0.81	10	56.04	0.017
COM 7 T	11.113	13.46	11.1	8.71	23.02	17.45	0.81	8	63.07	0.021
COM 8 T	12.7	16.26	12.7	9.91	25.4	20.65	0.81	9.5	88.39	0.029
COM 9 T	14.288	18.03	14.27	11.1	27.78	23.01	0.81	9.5	110.94	0.039
COM 10 T	15.875	19.81	15.88	12.7	30.16	25.4	0.81	8.5	141.96	0.05
COM 12 T	19.05	23.37	19.05	15.06	36.51	30.15	1.12	9	212.94	0.093
COM 14 T	22.225	24.89	22.23	17.86	39.69	33.32	1.12	9.5	279.93	0.119
COM 16 T	25.4	28.4	25.4	20.24	44.45	38.1	1.12	10	368.25	0.175
HCOM 16 T	25.4	34.54	25.4	19.84	50.8	42.85	0.81	9	472.46	0.251
HCOM 19 T	30.163	40.89	30.15	23.8	60.33	50.8	0.81	8.5	672	0.406
HCOM 20 T	31.75	40.89	30.15	23.8	60.33	50.8	0.81	8.5	672	0.406
HCOM 24 T	38.1	47.24	34.93	27.79	69.85	58.72	0.81	8.5	906.96	0.616
HCOM 28 T	44.45	53.59	39.67	31.75	79.38	66.68	1.12	8	1176.61	0.884
HCOM 32 T	50.8	59.94	44.45	34.93	88.9	74.6	1.12	8.5	1448.06	1.198

–滑动摩擦面:钢/PTFE合成材料
–外圈材料为碳钢;内圈材料为轴承钢GCr15，镀硬铬
–外圈挤压成型
–外圈球面粘贴PTFE合成材料–英制系列

– Sliding contact surfaces: steel / PTFE composite material.
– Outer ring is carbon steel; Inner ring is bearing steel GCr15 with hard chrome plating.
– Outer ring is pressed around inner ring.
– Outer race lined with PTFE composite material.
– Dimensions in inches.

GE..UK

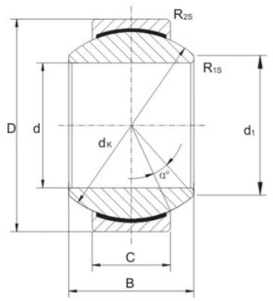

型号 Part No.	尺寸mm Dimensions									负荷KN Load ratings		重量KG Weight
	d	D	B	C	d_1 min	d_K	R_{1S} min	R_{2S} min	a ≈	dyn. C	stat. C0	Kg≈
GE 6 UK	6	14	6	4	8	10	0.3	0.3	13	3.6	9.1	0.004
GE 8 UK	8	16	8	5	10	13	0.3	0.3	15	5.8	14	0.008
GE 10 UK	10	19	9	6	13	16	0.3	0.3	12	8.6	21	0.011
GE 12 UK	12	22	10	7	15	18	0.3	0.3	10	11	28	0.015
GE 15 UK	15	26	12	9	18	22	0.3	0.3	8	18	45	0.027
GE 17 UK	17	30	14	10	20	25	0.3	0.3	10	22	56	0.041
GE 20 UK	20	35	16	12	24	29	0.3	0.3	9	31	78	0.066
GE 25 UK	25	42	20	16	29	35.5	0.6	0.6	7	51	127	0.119
GE 30 UK	30	47	22	18	34	40.7	0.6	0.6	6	65	166	0.163

–滑动摩擦面:钢/PTFE合成材料。
–外圈挤压成型。
–外圈球面粘贴有PTFE合成材料。
–内圈球面镀铬。

– Sliding contact surfaces: steel /PTFE composite material.
– Outer ring is pressed around inner ring.
– Outer race is lined with PTFE composite material
– Spherical surface of inner ring is chromium plated.

GE..PW

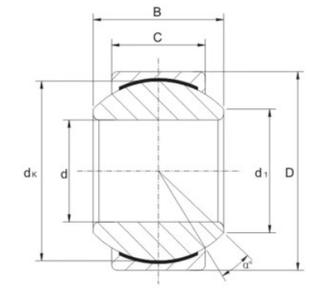

型号 Part No.	尺寸mm Dimensions							负荷KN Load ratings		重量KG Weight
	d	d_1	B	C	D	d_k	a ≈	dyn. C	stat. C0	Kg≈
GE 5 PW	5	7.7	8	6	13	11.113	13	6.2	17	0.007
GE 6 PW	6	8.9	9	6.75	16	12.7	13	7.5	22	0.01
GE 8 PW	8	10.3	12	9	19	15.875	13	12	36	0.016
GE 10 PW	10	12.9	14	10.5	22	19.05	13	17	50	0.031
GE 12 PW	12	15.4	16	12	26	22.225	13	22	67	0.065
GE 14 PW	14	16.8	19	13.5	28	25.4	15	28	86	0.09
GE 16 PW	16	19.3	21	15	32	28.575	15	35	107	0.1
GE 18 PW	18	21.8	23	16.5	35	31.75	15	47	131	0.125
GE 20 PW	20	24.3	25	18	40	34.925	15	51	157	0.18
GE 22 PW	22	25.8	28	20	42	38.1	15	62	191	0.21
GE 25 PW	25	29.5	31	22	47	42.85	15	77	236	0.295
GE 30 PW	30	34.8	37	25	55	50.8	15	103	318	0.425
GE 35 PW	35	37.7	43	28	62	57.1	16	130	400	0.5
GE 40 PW	40	45.2	49	33	75	66.6	17	179	550	0.9
GE 50 PW	50	56.6	60	45	90	82.5	12	302	928	1.64

–外圈材料为黄铜H62，钢球轴承钢GCr15，不电镀，外圈球面粘贴有PTFE，合成材料，则型号是G..PW.
–若外圈材料为黄铜H62，钢球材料为440C不锈钢，外圈球面粘贴有PTFE，合成材料，此型号为G..PWSS.
–若外圈材料为碳钢20，钢球轴承钢GCr15，不电镀，外圈球面贴贴有PTFE，合成材料，此型号为ST..PW.
–若外圈材料为304不锈钢，钢球材料为440C不锈钢，外圈球面粘贴有PTFE，合成材料，此型号为SS..PW.

– Out ring in brass H62; steel ball in bearing steel GCr15 without chromium plating;
out race is lined with PTFE composite material, the model is G..PW.
– If out ring in brass H62; steel ball in stainless steel 440C;
out race is lined with PTFE composite material, the model is G..PWSS.
– If out ring in carbon steel 20; steel ball in bearing steel GCr15 without chromium plating;
out race is lined with PTFE composite material, the model is ST..PW.
– If out ring in stainless steel 304, steel ball in stainless steel 440C;
out race is lined with PTFE composite material, the model is SS..PW.

GEEW..ES

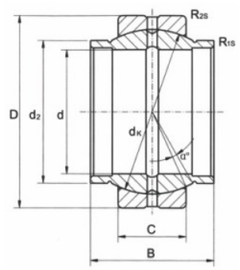

型号 Part No.	尺寸mm Dimensions									负荷KN Load ratings		重量KG Weight
	d	D	B	C	d2	dK	R1s min	R2s min	a ≈	dyn. C	stat. C0	Kg≈
GEEW12ES	12	22	12	7	15.5	18	0.3	0.3	4	10	53	0.022
GEEW15ES	15	26	15	9	18.5	22	0.3	0.3	5	16	84	0.031
GEEW16ES	16	28	16	9	20	23	0.3	0.3	4	17	85	0.035
GEEW17ES	17	30	17	10	21	25	0.3	0.3	7	21	106	0.044
GEEW20ES	20	35	20	12	25	29	0.3	0.3	4	30	146	0.071
GEEW25ES	25	42	25	16	30.5	35.5	0.6	0.6	4	48	240	0.131
GEEW30ES	30	47	30	18	34	40.7	0.6	0.6	4	62	300	0.168
GEEW32ES	32	52	32	18	37	44	0.6	1	4	65	328	0.182
GEEW35ES	35	55	35	20	40	47	0.6	1	4	79	399	0.253
GEEW40ES	40	62	40	22	46	53	0.6	1	4	99	495	0.338
GEEW45ES	45	68	45	25	52	60	0.6	1	4	127	637	0.481
GEEW50ES	50	75	50	28	57	66	1	1	4	156	780	0.558
GEEW60ES	60	90	60	36	68	80	1	1	4	245	1220	1.15
GEEW63ES	63	95	63	36	71.5	83	1	1	4	253	1260	1.25
GEEW70ES	70	105	70	40	78	92	1	1	4	313	1560	1.71
GEEW80ES	80	120	80	45	91	105	1	1	4	400	2000	2.39
GEEW90ES	90	130	90	50	99	115	1	1	4	488	2440	3.21
GEEW100ES	100	150	100	55	113	130	1	1	4	607	3030	4.79
GEEW110ES	110	160	110	55	124	140	1	1	4	645	3270	5.78
GEEW125ES	125	180	125	70	138	160	1	1	4	950	4750	9.49
GEEW160ES	160	230	160	80	177	200	1	1	4	1360	6800	16.5
GEEW200ES	200	290	200	100	221	250	1.1	1.1	4	2120	10600	32.1
GEEW250ES	250	400	250	120	317	350	1.1	1.1	4	3750	17800	99.1
GEEW320ES	320	520	320	160	405	450	1.1	1.1	4	6200	30500	225

尺寸单位为毫米.　滑动磨擦副:钢/钢

设计结构特点:单缝外圈向心关节轴承，外圈有一道轴向缝，内外圈材料均为轴承钢，淬火，高温磷化，滑动表面涂敷二硫化钼，具有耐磨损，抗腐蚀，自调心的特点，适用于承受径向重载和任一方向不大的轴向载荷。其特点与GE..ES系列相同，但内圈两端带有突出的圆筒，适合于将内圈和挡圈做成一体的安装均合。带“*”标识产品只有外圈有润滑油槽和油孔。

Dimensionsin mmSliding contact surfaces: Steel/SteelDesign and application features:
As series GE. . ES, but with cylindrical extensions at each side, for bearing arrangements
wher spacer sleevesare normal incorporated at each side of the inner ring. *A lubrication
groove and holes in the outer ring only.

GEZ..ES

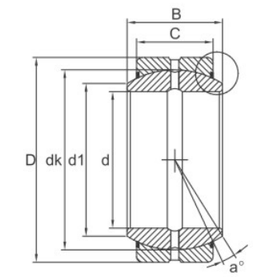

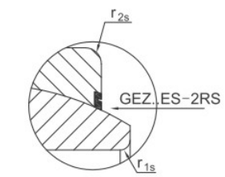

型号 Part No.		尺寸mm Dimensions								负荷KN Load ratings		重量KG Weight
		d	D	B	C	dK	R1s min	R2s min	a ≈	dyn. C	stat. C0	Kg≈
GEZ12ES		12.7	22.225	11.1	9.525	18	0.15	0.6	6	13	41	0.022
		0.5	0.875	0.437	0.375	0.707	0.006	0.024	6			
GEZ15ES		15.875	26.988	13.894	11.913	23	0.15	0.6	6	22	65	0.036
		0.625	1.0625	0.547	0.469	0.904	0.006	0.024	6			
GEZ19ES	GEZ19ES-2RS	19.05	31.75	16.662	14.275	27.5	0.3	0.6	6	31	95	0.053
		0.75	1.25	0.656	14.275	1.081	0.012	0.024	6			
GEZ22ES	GEZ22ES-2RS	22.225	36.513	19.431	16.662	32	0.3	0.6	6	42	127	0.085
		0.875	1.4375	0.756	0.656	1.258	0.012	0.024	6			
GEZ25ES	GEZ25ES-2RS	25.4	41.275	22.225	19.05	36.5	0.3	0.6	6	56	166	0.121
		1	1.625	0.875	0.75	1.437	0.012	0.024	6			
GEZ31ES	GEZ31ES-2RS	31.75	50.8	27.762	23.8	45.5	0.6	0.6	6	86	260	0.23
		1.25	2	1.093	0.937	1.788	0.024	0.024	6			
GEZ34ES	GEZ34ES-2RS	34.925	55.563	30.15	26.187	49	0.6	1	6	102	310	0.35
		1.375	2.1875	1.187	1.031	1.926	0.024	0.04	6			
GEZ38ES	GEZ38ES-2RS	38.1	61.913	33.325	28.575	54.7	0.6	1	6	125	375	0.42
		1.5	2.4375	1.312	1.125	2.154	0.024	0.04	6			
GEZ44ES	GEZ44ES-2RS	44.45	71.438	38.887	33.325	63.9	0.6	1	6	170	510	0.64
		1.75	2.8125	1.531	1.312	2.511	0.024	0.04	6			
GEZ50ES	GEZ50ES-2RS	50.8	80.963	44.45	38.1	73	0.6	1	6	224	670	0.93
		2	3.1875	1.75	1.5	2.869	0.024	0.04	6			
GEZ57ES	GEZ57ES-2RS	57.15	90.488	50.013	42.85	82	0.6	1	6	280	850	1.3
		2.25	3.5625	1.969	1.687	3.223	0.024	0.04	6			
GEZ63ES	GEZ63ES-2RS	63.5	100.013	1.969	47.625	92	0.024	1	6	355	1060	1.85
		2.5	3.9375	2.187	1.875	3.616	0.04	0.04	6			
GEZ69ES	GEZ69ES-2RS	69.85	111.125	61.112	52.375	100	1	1	6	415	1250	2.4
		2.75	4.375	2.406	2.062	3.937	0.04	0.04	6			
GEZ76ES	GEZ76ES-2RS	76.2	120.65	66.675	57.15	109.5	1	1	6	500	1500	3.1
		3	4.75	2.625	2.25	4.303	0.04	0.04	6			
GEZ82ES	GEZ82ES-2RS	82.55	130.175	72.238	61.9	119	1	1	6	585	1760	3.8
		3.25	5.125	2.844	2.437	4.685	0.04	0.04	6			
GEZ88ES	GEZ88ES-2RS	88.9	139.7	77.775	66.675	128	1	1	6	680	2040	4.8
		3.5	5.5	3.062	2.625	5.04	0.04	0.04	6			
GEZ95ES	GEZ95ES-2RS	95.25	149.225	83.337	71.425	5.04	1	1	6	780	2360	5.8
		3.75	5.875	3.281	2.812	5.393	0.04	0.04	6			
GEZ101ES	GEZ101ES-2RS	101.6	158.75	88.9	76.2	146	1	1	6	900	2650	7
		4	6.25	3.5	3	5.748	0.04	0.04	6			
GEZ107ES	GEZ107ES-2RS	107.95	168.275	94.463	80.95	155	1	1	6	1000	3000	8.41
		4.25	6.625	3.719	3.187	6.102	0.04	0.04	6			
GEZ114ES	GEZ114ES-2RS	114.3	177.8	100.013	85.725	164.5	1	1	6	1120	3400	9.8
		4.5	7	3.937	3.375	6.476	0.04	0.04	6			
GEZ120ES	GEZ120ES-2RS	120.65	187.325	105.562	90.475	173.5	1	1	6	1250	3750	11.5
		4.75	7.375	4.156	3.562	6.83	0.04	0.04	6			
GEZ127ES	GEZ127ES-2RS	127	196.85	111.125	95.25	183	1	1	6	1400	4150	13.5
		5	7.75	4.375	3.75	7.204	0.04	0.04	6			
GEZ152ES	GEZ152ES-2RS	152.4	222.25	120.65	104.775	207	1	1	6	1730	5200	17.5
		6	8.75	4.75	4.125	8.15	0.04	0.04	5			

尺寸单位为毫米或英寸　滑动磨擦副：钢/钢

设计结构特点：GEZ..ES和GE..ES相同，但尺寸为英制. GEZ..ES-2RS和GE..ES-2RS相同，但尺寸为英制

Dimensions in mm or inch Sliding contact surfaces:Steel/Steel
Design and application features:GEZ...ES:As series GE...ES,but with inch dimensions.GEZ...ES-2RS:As series GE...ES-2RS,but with inch dimensions.

GEBJ..S

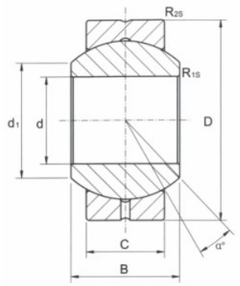

型号 Part No.	尺寸mm Dimensions								负荷KN Load ratings		重量KG Weight
	d	D	B	C	d_1 min	R_{1S} min	R_{2S} min	a ≈	dyn. C	stat. C0	Kg≈
GEBJ5S	5	13	8	6	7.7	0.3	0.3	13	3.2	9	0.007
GEBJ6S	6	16	9	6.75	9.0	0.3	0.3	13	4.1	12	0.010
GEBJ8S	8	19	12	9	10.4	0.3	0.3	13	6.5	2	0.016
GEBJ510S	10	22	14	10.5	12.9	0.3	0.6	13	9.6	28	0.031
GEBJ12S	12	26	16	12	15.4	0.3	0.6	15	12	37	0.055
GEBJ14S	14	28	19	13.5	16.9	0.3	0.6	15	16	49	0.078
GEBJ16S	16	32	21	15	19.4	0.3	0.6	15	20	61	0.095
GEBJ18S	18	35	23	16.5	21.9	0.3	0.6	15	25	74	0.140
GEBJ20S	20	40	25	18	24.4	0.3	0.6	15	3	89	0.180
GEBJ22S	22	42	28	20	25.8	0.3	0.6	15	36	108	0.210
GEBJ25S	25	47	31	22	29.6	0.3	0.6	15	45	13	0.350
GEBJ30S	30	55	37	25	34.8	0.6	0.6	15	61	178	0.560

尺寸单位为毫米.　　滑动磨擦副:钢/钢
设计结构特点:挤压外圈型向心关节轴承，外圈材料为轴承钢或碳钢，有润滑油槽和油孔，
内圈材料为轴承钢(HRC58~64)内圈球面镀硬铬，具有灵活性好，耐磨损，自调心等特点，
适合低速重载场合。

DimensionsinmmSliding contact surfaces:Steel/Steel
Design and application features:
Outer ring of carbon steel, nner ring of carbom chromium steel,hardened,sliding surface treated with chromium platingOuter ring pressed around inner ring. With lubricating groove and holes in the outer ring. It has characteristics of goodflexibility, wear-resistance and self-aligning,apply to low speed and heavy load mechanism.

GEBK..S

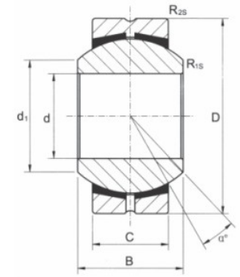

型号 Part No.	尺寸mm Dimensions									负荷KN Load ratings		重量KG Weight
	d	D	B	C	d_K	d_1	R_{1S} min	R_{2S} min	a ≈	dyn. C	stat. C0	Kg≈
GEBK5S	5	16	8	6	11.112	7.7	0.3	0.3	13	3.3	7.8	0.009
GEBK6S	6	18	9	6.75	12.7	9.0	0.3	0.3	13	4.3	9.8	0.013
GEBK8S	8	22	12	9	15.88	10.4	0.3	0.3	14	6.8	16	0.024
GEBK10S	10	26	14	10.5	19.05	12.9	0.3	0.6	14	10	23	0.039
GEBK12S	12	30	16	12	22.23	15.4	0.3	0.6	13	13	31	0.058
GEBK14S	14	34	19	13.5	25.4	16.9	0.3	0.6	16	17	40	0.084
GEBK16S	16	38	21	15	28.58	19.4	0.3	0.6	15	21	50	0.111
GEBK18S	18	42	23	16.5	31.75	21.9	0.3	0.6	15	26	61	0.16
GEBK20S	20	46	25	18	34.93	24.4	0.3	0.6	15	31	73	0.21
GEBK22S	22	50	28	20	38.1	25.8	0.3	0.6	15	38	88	0.26
GEBK25S	25	56	31	22	42.86	29.6	0.6	0.6	15	47	110	0.39
GEBK28S	28	62	35	25	47.63	32.3	0.6	0.6	15	59	138	0.53
GEBK30S	30	66	37	25	50.8	34.8	0.6	0.6	17	63	148	0.61

尺寸单位为毫米.
滑动磨擦副:钢/青铜
设计结构特点:镶垫外圈型向心关节轴承，外圈材料为轴承钢或碳钢，镶有青铜衬垫，内圈材料为轴承钢(HRC58~64).
内圈球面镀硬铬，具有灵活性好，耐磨损，自调心等特点，适合低速重载场合。

Dimensionsin mm
Sliding contact surfaces:Steel/Bronze
Design and application features:Outer ring of carbon steel,with bronze liner; Inner ring of carbon chromium steel,hardened , sliding surface treated withchromium plating. It has characteristics of good flexibility, wear-resistance and self-aligning,apply to low speed and heavyload mechanism.

GEG..C

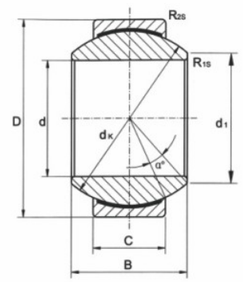

型号 Part No.	尺寸mm Dimensions									负荷KN Load ratings		重量KG Weight
	d	D	B	C	dK	d1	R1s min	R2s min	a ≈	dyn. C	stat. C0	Kg≈
GEG4C	4	14	7	4	10	8	0.3	0.3	20	3.6	9.1	0.005
GEG5C	5	16	9	5	13	8	0.3	0.3	21	5.8	14	0.006
GEG6C	6	16	9	5	13	9	0.3	0.3	21	5.8	14	0.008
GEG8C	8	19	11	6	16	11	0.3	0.3	21	8.6	21	0.014
GEG10C	10	22	12	7	18	13	0.3	0.3	18	11	28	0.021
GEG12C	12	26	15	9	22	16	0.3	0.3	18	18	45	0.033
GEG15C	15	30	16	10	25	19	0.3	0.3	16	22	56	0.049
GEG17C	17	35	20	12	29	21	0.3	0.3	19	31	78	0.083
GEG20C	20	42	25	16	35.5	24	0.3	0.3	17	51	127	0.153
GEG25C	25	47	28	18	40.7	29	0.6	0.6	17	65	166	0.203
GEG30C	30	55	32	20	47	34	0.6	0.6	17	83	212	0.304

尺寸单位为毫米。滑动磨擦副:钢对PTFE复合材料
设计结构特点:外圈材料为碳钢或轴承钢，挤压成型，球面村有PTFE复合材料，
内圈材料为轴承钢(HRC58~64)球面镀硬铬，具有自润滑，耐磨损，自调心，
低磨擦的特点，适用于低速中载的机械结构，尺寸和GEG..E、GEGES系列相
同但润滑方式不同。可以用不锈钢材料制造，型号为GEG..C/X

DimensionsinmmSliding contact surfaces: Steel/PTFE composite materiaDesign and application features:
Outer ring of carbom steel,pressed around the inner ring,with sliding surface of PFE composite material; Inner ringof
carbom chromiun steel,hardened.sliding surface treated with chromium platinq, It has characteristics ofmaintenance-free
wear-resistance.self-aligning and lower friction,apply to low speed snd heavy load mechanism.Made in stainless steel,
the bearing numberis GEG..C/X.

GE..ET-2RS

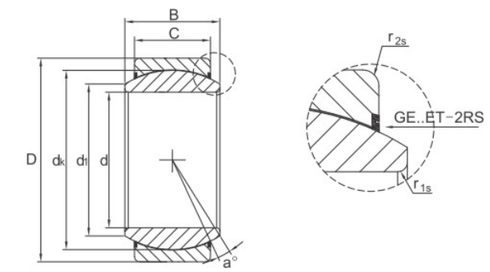

型号 Part No.	尺寸mm Dimensions									负荷KN Load ratings		重量KG Weight
	d	D	B	C	dK	d1	R1s min	R2s min	a ≈	dyn. C	stat. C0	Kg≈
GE15ET-2RS	15	26	12	9	22	18	0.3	0.3	8	23	47	0.027
GE17ET-2RS	17	30	14	10	25	20	0.3	0.3	10	30	60	0.041
GE20ET-2RS	20	35	16	12	29	24	0.3	0.3	9	42	83	0.066
GE25ET-2RS	25	42	20	16	35.5	29	0.6	0.6	7	68	137	0.119
GE30ET-2RS	30	47	22	18	40.7	34	0.6	0.6	6	88	176	0.153
GE35ET-2RS	35	55	25	20	47	39	0.6	1	6	112	224	0.233
GE40ET-2RS	40	62	28	22	53	45	0.6	1	7	140	280	0.306
GE45ET-2RS	45	68	32	25	60	50	0.6	1	7	180	360	0.427
GE50ET-2RS	50	75	35	28	66	55	0.6	1	6	220	440	0.546
GE60ET-2RS	60	90	44	36	80	66	0.6	1	6	345	695	1.04
GE70ET-2RS	70	105	49	40	92	77	0.6	1	6	440	880	1.55
GE80ET-2RS	80	120	55	45	105	88	0.6	1	6	567	1140	2.31
GE90ET-2RS	90	130	60	50	115	98	0.6	1	5	690	1370	2.75
GE100ET-2RS	100	150	70	55	130	109	0.6	1	7	858	1730	4.45
GE110ET-2RS	110	160	70	55	140	120	1	1	6	924	1860	4.82
GE120ET-2RS	120	180	85	70	160	130	1	1	6	1340	2700	8.05
GE140ET-2RS	140	210	90	70	180	150	1	1	7	1500	3000	11.02
GE160ET-2RS	160	230	105	80	200	170	1		8	1920	3800	14.01
GE180ET-2RS	180	260	105	80	225	192	1.1	1.1	6	2160	4300	18.65
GE200ET-2RS	200	290	130	100	250	212	1.1	1.1	7	3000	6000	28.03
GE220ET-2RS	220	320	135	100	275	238	1.1	1.1	8	3300	6500	35.51
GE240ET-2RS	240	340	140	100	300	265	1.1	1.1	8	3600	7200	39.91
GE260ET-2RS	260	370	150	110	325	285	1.1	1.1	7	4290	8650	51.54

尺寸单位为毫米　滑动磨擦副: 钢对PTFE织物
设计结构特点:外圈材料为轴承钢，开轴向缝，淬火并磷化，带有两个密封圈，
内球面粘贴PTFE织物，圈材料为轴承钢(HRC58~64)，球面镀硬铬，具有自
润滑，耐磨损，自调心，低磨擦，防尘的特点，适合多粉尘与承受径向载荷
及少量任一方面轴向载荷的场合。

Dimensions in mm Sliding contact surfaces:Steel/PTFE fabric
Design and application features:Outer ring of carbon chromium steel, fractured,hardened and phosphated,
with two seals at both sides, with sliding surface of PTFEabric: nner rina of carbom chromium stee . hardened.
siding surtace treated with chromium piatina, t has characteristics ofmaintenance-free, wear-resistance, self-aligning
and lower friction, for bearing arrangements where separate seals do not providea de quat e protection, suitable for heavy
radial loads and any direction lower axial loads mechanism.

自润滑向心关节轴承

Self-lubricating radial joint bearing

GEG..ET-2RS

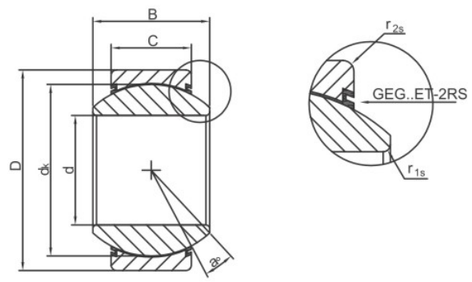

型号 Part No.	尺寸mm Dimensions								负荷KN Load ratings		重量KG Weight
	d	D	B	C	dK	R1s min	R2s min	a ≈	dyn. C	stat. C0	Kg≈
GEG15ET-2RS	15	30	16	10	25	0.3	0.3	16	30	60	0.049
GEG17ET-2RS	17	35	20	12	29	0.3	0.3	19	42	83	0.083
GEG20ET-2RS	20	42	25	16	35.5	0.3	0.3	17	68	137	0.153
GEG25ET-2RS	25	47	28	18	40.7	0.6	0.6	17	88	176	0.203
GEG30ET-2RS	30	55	32	20	47	0.6	0.6	17	112	224	0.304
GEG35ET-2RS	35	62	35	22	53	0.6	1	16	140	280	0.408
GEG40ET-2RS	40	68	40	25	60	0.6	1	17	180	360	0.542
GEG45ET-2RS	45	75	43	28	66	0.6	1	15	220	440	0.713
GEG50ET-2RS	50	90	56	36	80	0.6	1	17	345	695	1.14
GEG60ET-2RS	60	105	63	40	92	0.6	1	17	440	880	2.05
GEG70ET-2RS	70	120	70	45	105	0.6	1	16	567	1140	3.01
GEG80ET-2RS	80	130	75	50	115	1	1	14	690	1370	3.64
GEG90ET-2RS	90	150	85	55	130	1	1	15	858	1730	5.22
GEG100ET-2RS	100	160	85	55	140	1	1	14	924	1860	6.05
GEG110ET-2RS	110	180	100	70	160	1	1	12	1340	2700	9.68
GEG120ET-2RS	120	210	115	70	180	1	1	16	1500	3000	14.01
GEG140XT-2RS	140	230	130	80	200	1	1	16	1920	3800	19.01
GEG160XT-2RS	160	260	135	80	225	1.1	1.1	16	2160	4300	20.02
GEG180XT-2RS	180	290	155	100	250	1.1	1.1	14	3000	6000	32.21
GEG200XT-2RS	200	320	165	100	275	1.1	1.1	15	3300	6550	45.28
GEG220XT-2RS	220	340	175	100	300	1.1	1.1	16	3600	7200	51.12

尺寸单位为毫米滑动磨擦副:钢对PTFE织物

设计结构特点:外圈材料为轴承钢，开轴向缝，淬火并磷化，带有两个密封圈，内球面粘贴PTFE织物，

内圈材料为轴承钢(HRC58～64)，球面镀硬铬，具有自润滑，耐磨损，自调心，低磨擦，防尘的特点，适合多粉尘与承受径向载荷及少量任一方面轴向载荷的场合。

与GEG..XT-2RS相同，但外圈沿轴剖分成两半，有锁圈固定。

Dimensions in mm Sliding contact surfaces: Steel/ PTFE fabricDesign and application features:

Outer ring of carbon chromium steel, fractured ,hardened and phosphated , with two seals at both sides, with sliding surface of PTFE fabric;IInner ring of carbom chromium steel, hardened,sliding surface treated with chromium plating, It has characteristics of maintenance-free、 wear-resistance、self-aligning and lower friction , for bearing arrangements where separate seals do not providea de quat e protection, suitable for heavy radial loads and any direction lower axial loads mechanism.

GE..XT-2RS:As series GEG..ET-2RS,but outer ring axially split twice, held together by retaining ring.

球头杆端关节轴承

Spherical Plain Bearings

CS..

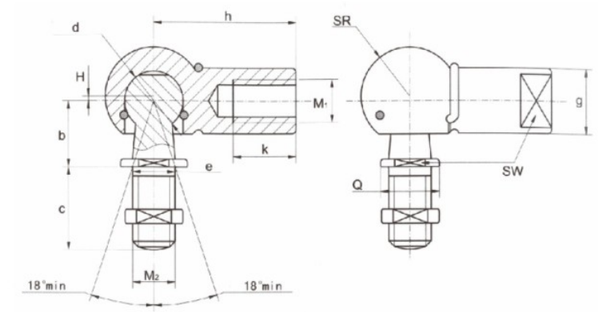

型号 Part No.	尺寸mm Dimensions													负荷KN Load ratings	重量KG Weight
	h ±0.3	g ±0.5	M1 6H	M1 6g	S⊘d	b ±0.3	Sw h14	Q h14	c ±0.3	e	H ±0.5	K min	SR ±0.5	stat. C0	Kg≈
CS8	22	8	M5×0.8	M5×0.8	8	9	7	8	10	5	0.7	10.2	6.4	15.2	0.014
CS10	25	10	M6×1.0	M6×1.0	10	11	8	10	12.5	6	0.7	11.5	7.4	25.2	0.024
CS13	30	13	M8×1.25	M8×1.25	13	13	11	13	16.5	8	1.16	14	9.65	53.1	0.053
CS16	35	16	M10×1.5	M10×1.5	16	16	13	16	20	10	1.16	15.5	12	103.8	0.097
CS16-1	35	16	M12×1.75	M12×1.75	16	16	13	16	20	12	1.16	15.5	12	103.8	0.097
CS19	45	22	M14×2	M14×2	19	20	17	22	27	14	1.5	21.5	15	220.9	0.218
CS19-1	45	22	M14×1.5	M14×1.5	19	20	17	22	27	14	1.5	21.5	15	220.9	0.218

技术参数：

1.圆周摆动:灵活,无卡滞现象.

2.表面处理：镀白锌,腔体内部加脂.

3.球头连杆：轴承钢球,连杆35#,40Cr.

4.球座:碳钢.

5.温度范围:120℃到-40℃,产品无异常现象.

6.参考标准:QC/T327　1999及相关标准.

Technology Condition:

1.Circle swing agilely without any blocked.

2.Surface treatment:Zn plated,inner parts are full of lubricate oil.

3.Ball joint shaft:Steel bering,shaft 35#steel.

4.Ball joint housing:Ball joint housing:45#steel.

5.Work on-40C ~120C temperature.Excellent performance.

6.Standard reference:QC/T327-1999&other relative standard.

CF..Y

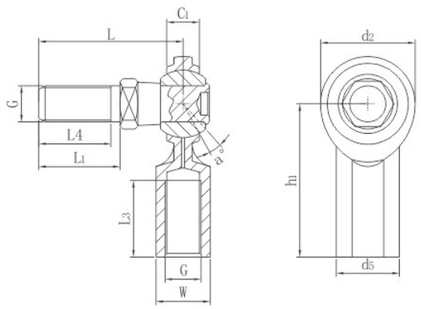

型号 Part No.	尺寸mm Dimensions										负荷KN Load ratings		重量KG Weight
	C_1	D_2	G 2B	h_1	L_3 min	W	d_5	L	L_1	a ≈	dyn. C	stat. C0	Kg≈
CF3F*	5.94	15.68	10-32	26.97	12.7	7.92	10.31	25.4	6.35	25	9.247	0.01～0.03	0.023
	0.234	0.625	10-32	1.25	0.5	0.312	0.406	1	0.25	25	9.247	0.01～0.03	0.023
CF4F*	6.35	19.05	1-4/28	33.32	17.45	9.53	11.91	26.19	14.27	25	14.269	0.01～0.03	0.027
	0.25	0.75	1-4/28	1.562	0.687	0.375	0.468	1.031	0.562	25	14.269	0.01～0.03	0.027
CF5F*	7.92	22.23	5-16-24	34.93	17.45	11.1	12.7	30.96	17.45	25	17.009	0.01～0.03	0.05
	0.312	0.875	5-16-24	1.875	0.687	0.437	0.5	1.219	0.687	25	17.009	0.01～0.03	0.05
CF6F	9.12	25.4	3-8/24	41.26	20.62	14.27	17.45	39.67	23.01	25	22.627	0.015～0.06	0.077
	0.359	1	3-8/24	1.936	0.612	0.562	0.667	1.562	0.906	25	22.627	0.015～0.06	0.077
CF7F	10.31	28.58	7-16-20	46.02	23.8	15.88	19.05	44.45	26.97	25	28.4	0.015～0.06	0.122
	0.406	1.125	7-16-20	2.125	0.937	0.625	0.75	1.75	1.062	25	28.4	0.015～0.06	0.122
CF8F	11.5	33.32	1-2/20	53.98	26.97	19.05	22.23	50.8	26.56	25	40.459	0.015～0.06	0.181
	0.453	1.312	1-2/20	2.438	1.062	0.75	0.875	2	1.125	25	40.459	0.015～0.06	0.181
CF10F	12.29	38.1	5-8/18	63.5	34.93	22.23	25.4	63.5	38.1	25	43.203	0.04～0.08	0.308
	0.484	1.5	5-8/18	2.625	1.375	0.875	1	2.5	1.5	25	43.203	0.04～0.08	0.308
CF12F	15.06	44.45	3-4/16	73.03	39.67	25.4	28.58	76.2	46.02	25	63.193	0.04～0.08	0.504
	0.593	1.75	3-4/16	2.875	1.56	1	1.125	3	1.812	25	63.193	0.04～0.08	0.504

尺寸单位为毫米或英寸.
注:如果是左旋螺纹，轴承型号需加“L”，例如:CFL10Y
带""型号均不配油孔或油杯，其余若需配油杯，请用CF..YS的代号.
滑动磨擦副:钢/钢
设计结构特点:杆端体材料为碳钢，挤压成形，镀环保白锌，内圈（球）材料为轴承钢，淬火球面镀硬铬，可通过油嘴或杆端眼润滑,具有较好的轴向载荷。

Dimensions in mm or inch.
Note:For left-hand thread,Please add suffix "L",e.g.CFL10Y
Lubricating hole or grease nipple isn't available for the sizes marked ""
When a grease nipple is required for other sizes for othe sizes,please use the sign CF..YS.
Sliding contact surfaces:Steel/Steel
Design and application features:
Rod end of steel and zinc coated,with male or female thread,inne ring of carbon chromium steel,spherical surface with chromium plating.It has characteristics of large load capability,easy mounting and dismounting and mechanism simplification.

CM..Y

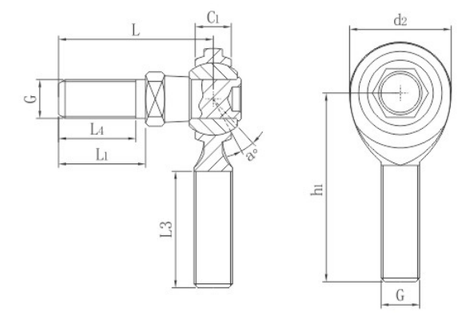

型号 Part No.	尺寸mm Dimensions								负荷KN Load ratings		重量KG Weight
	C_1	D_2	G 2A	h_1	L_3 min	L	L_1	a ≈	dyn. C	stat. C0	Kg≈
CM3F*	5.94	15.88	10-32	31.75	19.05	25.4	6.35	25	5.355	0.01～0.03	0.018
	0.234	0.625	10-32	1.25	0.75	1	0.25	25	5.355	0.01～0.03	0.018
CM4F*	6.35	19.05	1-4/28	39.67	25.4	26.19	14.27	25	9.839	0.01～0.03	0.023
	0.25	0.75	1-4/28	1.562	1	1.031	0.562	25	9.839	0.01～0.03	0.023
CM5F*	7.92	22.23	5-16-24	47.63	31.75	30.96	17.45	25	15.91	0.01～0.03	0.045
	0.312	0.875	5-16-24	1.875	1.25	1.219	0.687	25	15.91	0.01～0.03	0.045
CM6F	9.12	25.4	3-8/24	49.23	31.75	39.67	23.01	25	22.542	0.015～0.06	0.068
	0.359	1	3-8/24	1.938	1.25	1.562	0.906	25	22.542	0.015～0.06	0.068
CM7F	10.31	28.58	7-16-20	53.98	34.93	44.45	26.97	25	28.223	0.015～0.06	0.109
	0.406	1.125	7-16-20	2.125	1.375	1.75	1.062	25	28.223	0.015～0.06	0.109
CM8F	11.5	33.32	1-2/20	61.93	38.1	50.8	28.58	25	37.087	0.015～0.06	0.159
	0.453	1.312	1-2/20	2.438	38.1	2	1.125	25	37.087	0.015～0.06	0.159
CM10F	12.29	38.1	5-8/18	66.68	41.28	63.5	36.1	25	43.203	0.04～0.08	0.277
	0.484	1.5	5-8/18	2.625	1.625	2.5	1.5	25	43.203	0.04～0.08	0.277
CM12F	15.06	44.45	3-4/16	73.03	44.45	76.2	46.02	25	63.193	0.04～0.08	0.467
	0.593	1.75	3-4/16	2.875	1.75	3	1.812	25	63.193	0.04～0.08	0.467

尺寸单位为毫米或英寸
注：如果是左旋螺纹，轴承型号需加“L”,例如：CML10Y
带""型号均不配油孔或油杯，其余若需配油杯，请用CM.YS的代号
滑动磨擦副：钢/钢
设计结构特点：杆端体材料为碳钢，挤压成形，镀环保白锌，内圈（球)材料为轴承钢，淬火球面镀硬铬，可通过油嘴或杆端眼润滑，具有较好的轴向载荷。

Dimensions in mm or inch.
Note:For left-hand thread,Please add suffix "L",e.g.CML10Y
Lubricating hole or grease nipple isn't available for the sizes marked "*
When a grease nipple is required for other sizes for othe sizes,please use the sign CM..YS.
Sliding contact surfaces:Steel/Steel
Design and application features:
Rod end of steel and zinc coated,with male or male thread,inne ring of carbon chromium steel,spherical surface with chromium plating.It has characteristics of large load capability,easy mounting and dismounting and mechanism simplification.

SQ..RS

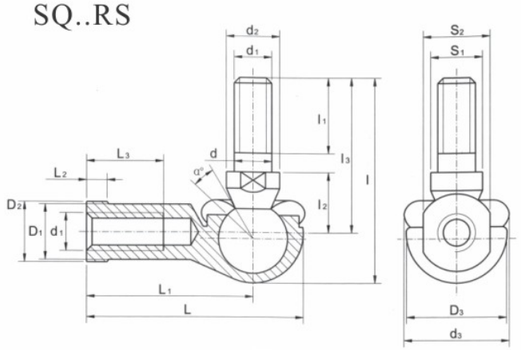

型号 Part No.	尺寸mm Dimensions																		负荷KN Load ratings	重量KG Weight
	d	d_1	d_2 min	d_3 max	l max	l_1 min	l_2	L_3 max	S_1	L max	L_1	L_2 max	L_3 max	D_1 max	D_2 max	D_3 max	S_2	a ≈	stat. C0	Kg≈
SQ5-RS	5	M5	9	19	29	8	10	21	7	35	27	4	14	9	11	16	9	25	2.2	0.026
SQ6-RS	6	M6	10	20	35.5	11	11	26	8	40	30	5	14	10	13	19	11	25	3.5	0.039
SQ8-RS	8	M8	12	24	42.5	12	14	31	10	48	36	5	17	12.5	16	23	14	25	6.6	0.068
SQ10-RS	10	M10×1.25	14	30	50.5	15	17	37	11	57	43	6.5	21	15	19	27	17	25	10	0.112
SQ10-RS-1	10	M10×1.5	14	30	56.5	21	17	43	11	57	43	6.5	21	15	19	27	17	25	10	0.112
SQ12-RS	12	M12×1.25	17	32	57.5	17	19	42	15	66	50	6.5	25	17.5	22	31	19	25	16	0.164
SQ12-RS-1	12	M12×1.75	17	32	64.5	24	19	49	15	66	50	6.5	25	17.5	22	31	19	25	16	0.164
SQ14-RS	14	M14×1.5	19	38	73.5	22	21.5	56	17	75	57	8	26	17.5	25	35	22	25	19	0.254
SQ14-RS-1	14	M14×2	19	38	79.5	28	21.5	62	17	75	57	8	26	20	25	35	22	25	19	0.254
SQ16-RS	16	M16×1.5	22	44	79.5	23	23.5	60	19	84	64	8	32	20	27	39	22	20	26	0.336
SQ16-RS-1	16	M16×2	22	44	85.5	29	23.5	66	19	84	64	8	32	22	27	39	22	20	26	0.336
SQ18-RS	18	M18×1.5	23	45	90	25	26.5	68	20	93	71	10	34	25	31	44	27	20	33	0.464
SQ20-RS	20	M20×1.5	27	50	90	25	27	68	24	99	77	10	35	27.5	34	44	30	20	45	0.538
SQ22-RS	22	M22×1.5	27	52	95	26	28	70	24	109	84	12	41	30	37	50	32	16	48	0.713

尺寸单位为mm
滑动磨擦副：钢对锌基合金
设计结构特点：若是左旋螺纹,轴承型号需加“L”,例如:SQL5-RS.球头座材料为锌基合金（铸造），
球杆材料为碳钢. 产品具有很强的调心能力，常用于汽车部件机械部件.

Dimensions in mm
Sliding contact surfaces:Steel/Zinc base alloy
Design and application features:
The shank of ball joint housing may be left-hand thread,for letf-hand thread,suffix "L"is added to bearing number ar thread sign,e.g.SQL5-RS.
Ball joint housing is made up of zinc base alloy,ball joint shank of carbon steel.It has characteristics of self-aligning,wear-resistance and easy mounting,apply to transportation vehicle,packaging machinery, agricultural machinery,etc..

BL..

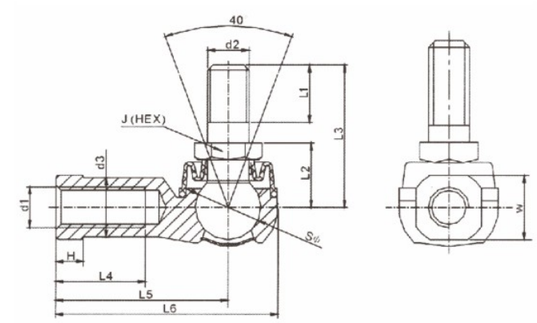

型号 Part No.	尺寸mm Dimensions													负荷KN Load ratings
	d_1	d_2	d_3	L_1	L_2	L_3	L_4	L_5	L_6	H	W	J	Sφ	stat. C0
BL6×1	M6×1	M6×1	10	11	11	26	16	30	45.5	5	11	10	11.11	9900
BL8×1.25	M8×1.25	M8×1.25	13	12	14	31	19	36	55.5	6	14	12	12.7	12500
BL10×1.5	M10×1.5	M10×1.5	14.5	21	17	43	23	43	55.5	7	17	14	15.87	18300
BL10×1.25	M10×1.25	M10×1.25	14.5	15	17	37	23	473	64.5	7	17	14	15.87	18300
BL12×1.75	M12×1.75	M12×1.75	17.5	24	19	49	26	50	64.5	8	19	17	19.05	26700
BL12×1.25	M12×1.25	M12×1.25	17.5	17	19	42	26	50	83	8	19	17	19.05	26700
BL16×2	M16×2	M16×2	22	29	23.5	66	34	64	83	11	24	22	22.22	36400
BL16×1.5	M16×1.5	M16×1.5	22	23	23.5	60	34	64	83	11	24	22	22.22	36400

技术参数
1.圆周摆动:灵活,无卡滞现像.
2.球面间隙：轴直角方向0.02～0.065mm轴方向≤0.3mm.
3.螺纹精度:"6H"级.
4.球头连杆：轴承钢球,连杆35#,40Cr.
5.球座：高强度的锌合金.
6.温度范围：120℃到-40℃,产品无异常现像.
7.参考标准:QC/T327-1999及相关标准.

Technology Condition
1.Circle swing agilely without any blocked.
2.Spherical surface clearance:Vertical angle of axes 0.02~0.65mm,Axes Direction<0.3m.
3.Precision of screw thread grades"6H".
4.Ball joint shaft:Steel bearing,shaft 35#,40Cr steel.
5.Ball joint housing:High rigidity Zn synthetic material.
6.Work on -40C~120C temperature.Excellent performance.
7.Standard reference:QC/T327-1999 other relative standard.

自润滑弯杆型球头杆端关节轴承

Spherical Plain Bearings

LHSA..RS

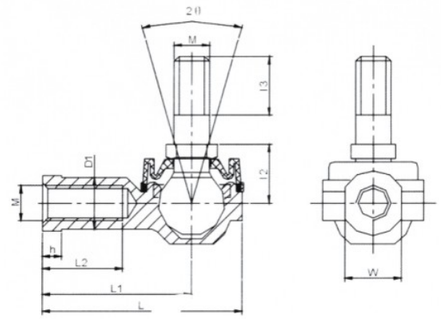

型号 Part No.	尺寸mm Dimensions								螺纹 Screw thread	摆角 Angle
	L	L_1	L_2	l_2	l_3	W	D_1	h	M	Angle
LHSA5-RS	38.5	30	16	12	10	10	10	5	M5×0.75	17
LHSA6-RS	38.5	30	16	12	10	10	10	5	M6×1.0	17
LHSA8-RS	48	36	19	14.5	12.5	14	13	5	M8×1.25	18
LHSA10-RS	57	43	23	16	17	17	15	6.5	M10×1.25	19
LHSA12-RS	67	50	27	20	20	19	17.5	6.5	M12×1.75	20
LHSA14-RS	76	57	30	22.5	22	22	20	8	M14×2.0	20
LHSA16-RS	84	64	32	36.5	23	22	22	8	M16	20
LHSA18-RS	93	71	34	41.5	25	27	25	10	M18	20
LHSA20-RS	99	77	35	41	25	30	28	10	M20	20
LHSA22 RS	109	84	41	42	26	32	30	12	M22	20

技术参数

1.圆周摆动:灵活,无卡滞现像.
2.球面间隙：轴直角方向0.02～0.065mm轴方向≤0.3mm.
3.螺纹精度:"6H"级.
4.球头连杆：轴承钢球,连杆35#,40Cr.
5.球座：高强度的锌合金.
6.温度范围：120℃到-40℃,产品无异常现像.
7.参考标准:QC/T327-1999及相关标准.

Technology Condition

1.Circle swing agilely without any blocked.
2.Spherical surface clearance:Vertical angle of axes 0.02~0.65mm,Axes Direction<0.3m.
3.Precision of screw thread grades"6H".
4.Ball joint shaft:Steel bearing,shaft 35#,40Cr steel.
5.Ball joint housing:High rigidity Zn synthetic material.
6.Work on -40C~120C temperature.Excellent performance.
7.Standard reference:QC/T327-1999 other relative standard.

自润滑直杆型球头杆端关节轴承

Spherical Plain Bearings

SQZ..RS..

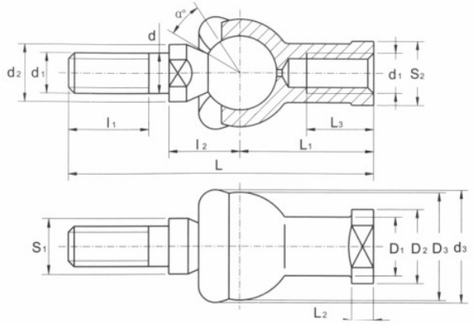

型号 Part No.	尺寸mm Dimensions																负荷KN Load ratings	重量KG Weight
	d	d_1	d_2 min	d_3 max	l_1 min	l_2	S_1	L max	L_1	L_2 max	L_3 max	D_1 max	D_2 max	D_3 max	S_2	a ≈	stat. C0	Kg≈
SQZ5-RS	5	M5	9	19	8	11	7	46	24	4	12	9	11	17	9	15	2.8	0.025
SQZ6-RS	6	M6	10	20	11	12.2	8	55.2	28	5	15	10	13	20	11	15	3.7	0.041
SQZ8-RS	8	M8	12	24	12	16	10	65	32	5	16	12.5	16	24	14	15	5.8	0.075
SQZ10-RS	10	M10×1.25	14	30	15	19.5	11	74.5	35	6.5	18	15	19	28	17	15	8.4	0.12
SQZ10-RS-1	10	M10×1.5	14	30	21	19.5	11	80.5	35	6.5	18	15	19	28	17	15	8.4	0.12
SQZ12-RS	12	M12×1.25	17	32	17	21	15	84	40	6.5	20	17.5	22	32	19	15	11	0.18
SQZ12-RS-1	12	M12×1.75	17	32	24	21	15	91	40	6.5	20	17.5	22	32	19	15	11	0.18
SQZ14-RS	14	M14×1.5	19	38	22	23.5	17	103	45	8	25	20	25	36	22	11	15	0.27
SQZ14-RS-1	14	M14×2	19	38	28	23.5	17	109	45	8	25	20	25	36	22	11	15	0.27
SQZ16-RS	16	M16×1.5	22	44	23	25.5	19	112	50	8	27	22	27	40	25	11	15	0.36
SQZ16-RS-1	16	M16×2	22	44	29	25.5	19	118	50	8	27	22	27	40	25	11	15	0.36
SQZ18-RS	18	M18×1.5	23	45	25	31	20	130.5	58	10	32	25	31	45	27	11	19	0.54
SQZ20-RS	20	M20×1.5	27	50	25	29	24	133	63	10	38	27.5	34	45	30	7.5	19	0.57
SQZ22-RS	22	M22×1.5	27	52	26	33	24	145	70	12	43	30	37	50	32	7.5	23	0.76

尺寸单位为mm
滑动磨擦副：钢对锌基合金
设计结构特点：若是左旋螺纹,轴承型号需加“L”,例如：SQZL5-RS.
球头座材料为锌基合金（铸造），球杆材料为碳钢.产品具有很强的调
心能力，常用于汽车部件机械部件.

Dimensions in mm
Sliding contact surfaces:Steel/Zinc base alloy
Design and application features:
The shank of ball joint housing may be left-hand thread,for letf-hand thread,suffix "L"is added to
bearing number ar thread sign,e.g.SQZL5-RS.
Ball joint housing is made up of zinc base alloy,ball joint shank of carbon steel.It has characteristics
of self-aligning,wear-resistance and easy mounting,apply to transportation vehicle,packaging machinery,
agricultural machinery,etc..

自润滑单杆型球头杆端关节轴承

Spherical Plain Bearings

SQD..

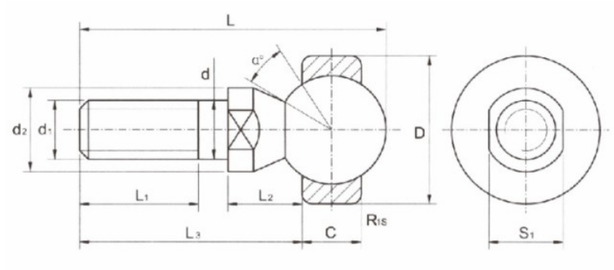

型号 Part No.	尺寸mm Dimensions												负荷KN Load ratings	重量KG Weight
	D	D_1	D_2	L_1 min	L_2	L_3 max	L max	S_1	C	D	R_{1S} min	a ≈	stat. C0	Kg≈
SQD5	5	M5	9	8	8	19	27.5	7	6	16	0.3	25	2	0.014
SQD6	6	M6	10	11	8.8	23.8	33.5	8	6.75	18	0.3	25	3.2	0.021
SQD8	8	M8	12	12	11.6	28.6	41	10	9	22	0.3	25	5.7	0.042
SQD10	10	M10×1.25	14	15	14.2	34.2	49	11	10.5	26	0.3	25	9.2	0.067
SQD10-1	10	M10×1.5	14	21	14.2	40.2	55	11	10.5	26	0.3	25	9.2	0.067
SQD12	12	M12×1.25	17	17	15.1	38.1	55.1	15	12	30	0.5	25	14	0.108
SQD12-1	12	M12×1.75	17	24	15.1	45.1	62.1	15	12	30	0.5	25	14	0.108
SQD14	14	M14×1.5	19	22	16.8	51.3	70.7	17	13.5	34	0.5	20	19	0.167
SQD14-1	14	M14×2	19	28	16.8	57.3	76.7	17	13.5	34	0.5	20	19	0.167
SQD16	16	M16×1.5	22	23	18	54.5	76.3	19	15	38	0.5	20	26	0.238
SQD16-1	16	M16×2	22	29	18	60.5	82.3	19	15	38	0.5	20	26	0.238

尺寸单位为mm 滑动磨擦副：钢对锌基
设计结构特点： 若是左旋螺纹,轴承型号需加“L”,例如：SQDL5-RS.球头座材料为锌基合金（铸造），
球杆材料为 碳钢. 产品具有很强的调心能力，常用于汽车部件机械部件.

Dimensions in mm Sliding contact surfaces:Steel/Zinc base alloy
Design and application features:
The shank of ball joint housing may be left-hand thread,
for letf-hand thread,suffix "L"is added to
bearing number ar thread sign,e.g.SQDL5-RS.
Ball joint housing is made up of zinc base alloy ball
joint shank of carbon steel.It has characteristics
of self-aligning,wear-resistance and easy mounting,
apply to transportation vehicle,packaging machinery,
agricultural machinery,etc..

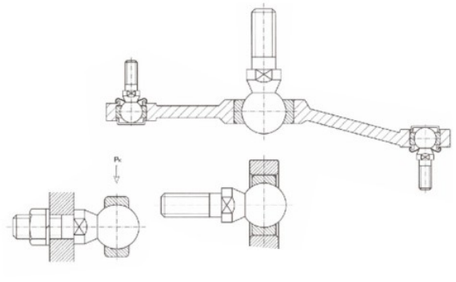

油润滑焊接型杆端关节轴承

Spherical Plain Bearings

TS..NF

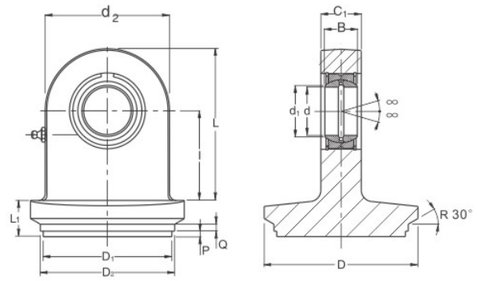

型号 Part No.	尺寸mm Dimensions														负荷KN Load ratings	
	P	Q	d	B	d_1	I	d_2	C_1	L	L_1 max	D max	D_1	a ≈	D_2	dyn. C	stat. C0
TS20NF	2	1.5	20	16	24.1	38	50	19	63	13	60	50	9	53	30	67
TS25NF	2	1.5	25	20	29.3	45	55	23	72.5	14	73	63	7	66	48	69.5
TS30NF	2	1.5	30	22	34.2	51	65	28	83.5	15	95	80	6	83	62	118
TS35NF	2	1.5	35	25	39.7	61	83	30	102.5	15	105	90	6	93	80	196
TS40NF	2	1.5	40	28	45	69	100	35	119	16	115	100	7	103	100	305
TS50NF	2	1.5	50	35	56	88	123	40	149.5	19	145	125	6	128	156	441
TS60NF	2	1.5	60	44	66.8	100	140	50	170	21	170	150	6	153	245	570

尺寸单位为毫米. 滑动磨擦副：钢/钢
设计结构特点：由焊接性能良好的杆端体（锻造）与GE..ES、GE..ES-2RS系列向心关节轴承组装而成，杆端柄部有45焊接面并装有开口销，
焊接时方便定位,可通过油杯或杆端眼润滑.产品具有很强的承载力常用于液压缸、油缸，又名：油缸耳环.

Dimensions in mm
Sliding contact surfaces:Steel/Steel
Design and application features:
Rod end with welding shank is made up of a rod end and a radial spherical plain bearing of series GE...E or GE...ES,
fixed in housing by snap rings,rod end of weldable steel and phosphated,with rectangular welding face;Can be lubricated
via a nipple.It has characteristics of large load capability,easy mounting and dismounting and mechanism simplification.

GIHR-K..DO

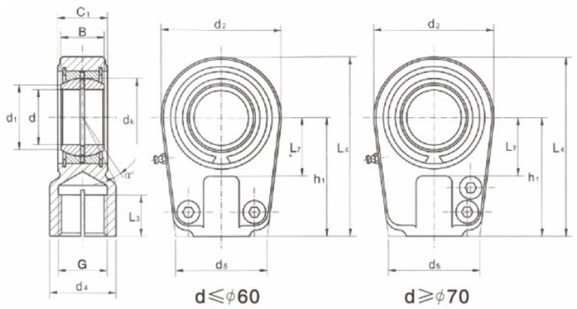

型号 Part No.	尺寸mm Dimensions															负荷KN Load ratings		重量KG Weight
	d	B	dK	C1	d2	G 6H	h1	L3 min	L4 max	d4	d5	d1	b	R1S min	a ≈	dyn. C	stat. C0	Kg≈
GIHR-K20 DO	20	16	29	19	56	M16×1.5	50	17	80	25	46	24.1	17	0.3	9	30	42	0.37
GIHR-K25 DO	25	20	35.5	23	56	M16×1.5	50	17	80	25	46	29.3	21	0.6	7	48	52	0.43
GIHR-K30 DO	30	22	40.7	28	64	M22×1.5	60	23	94	32	50	34.2	26	0.6	6	62	72	0.7
GIHR-K35 DO	35	25	47	30	78	M28×1.5	70	29	112	40	66	39.7	28	0.6	6	79	104	1.1
GIHR-K40 DO	40	28	53	35	94	M35×1.5	85	36	135	49	76	45	33	0.6	7	99	173	2.1
GIHR-K50 DO	50	35	66	40	116	M45×1.5	105	46	168	61	90	55.9	37	0.6	7	156	265	3.3
GIHR-K60 DO	60	44	80	50	130	M58×1.5	130	59	200	75	120	66.8	46	1	6	245	320	5.5
GIHR-K70 DO	70	49	92	55	154	M65×1.5	150	66	232	86	130	77.9	51	1	6	313	440	8.6
GIHR-K80 DO	80	55	105	60	176	M80×2	170	81	265	105	160	89.4	55	1	6	400	570	12
GIHR-K90 DO	90	60	115	65	206	M100×2	210	101	323	124	180	98.1	60	1	5	490	980	21.5
GIHR-K100 DO	100	70	130	70	230	M110×2	235	111	360	138	200	109.5	65	1	7	607	1120	28
GIHR-K110 DO	110	70	140	80	265	M120×3	265	125	407.5	152	220	120	75	1	6	655	1700	40.5
GIHR-K120 DO	120	85	160	90	340	M130×3	310	135	490	172	257	130	85	1	6	950	2900	76
GIHR-K140 DO	140	90	180	100	350	M140×4	345	145	530	200	290	150	92	1	7	1080	5400	102
GIHR-K160 DO	160	105	200	110	380	M150×4	400	165	600	220	300	170	102	1	8	1370	6800	170

尺寸单位为mm
注：如果是左旋螺纹，轴承型号需加“L”，例如：GIHL-K30DO.
滑动磨擦副：钢/钢
设计结构特点：由杆端体与GE..ES,GE..ES2RS系列向心关节轴承组装而成，用挡圈固定，锻杆端体材料为碳钢(锻造成型d≤70或铸铁d≥80)，杆端柄内螺纹部有轴向缝并锁紧装置，可通过螺钉锁紧，可通过油杯润滑。产品具有很强的承载力常用于液压缸、油缸，又名：油缸耳环

Dimensions in mm
Note:For left-hand thread,suffix "L"is added to bearing number and thread sign,e.g.GIHL-K 30 DO
Sliding contact surfaces:Steel/Steel
Design and application features:
Rod end with locking slot is made up of a rod end and a radial spherical plain bearing of series GE...ES,fixed in housing by snap rings,rod end of carbon steel(d<80)or spheroidal graphite cast steel(d-90),Thread can be closed because shand is slotted,thread clamping by two hexagon socket screws;Can be lubricated via a nipple.It has characteristics of large load-capability,easy mounting and dismounting and mechanism simplification.

GIHN-K..LO

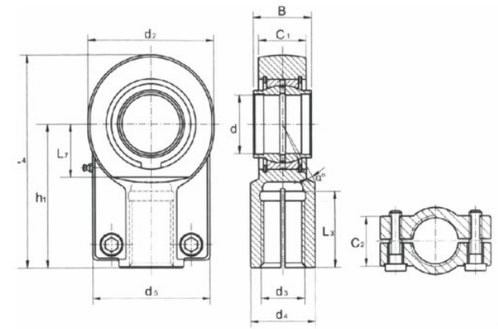

型号 Part No.	尺寸mm Dimensions															负荷KN Load ratings		重量KG Weight
	d H7	B	dk	C1	d2	G	h1	L3	L4	d4	d5	C2	R1S min	a ≈		dyn. C	stat. C0	Kg≈
GIHN-K12 LO*	12	12	18	11	32	M12×1.25	38	17	54	16	32	15	0.3	4		10	15	0.11
GIHN-K16 LO	16	16	23	14	40	M14×1.5	44	19	64	21	40	15	0.3	4		17	24	0.21
GIHN-K20 LO	20	20	29	17	47	M16×1.5	52	23	77	25	47	19	0.3	4		30	36	0.40
GIHN-K25 LO	25	25	35.5	22	58	M20×1.5	65	29	96	30	54	19	0.6	4		48	57	0.66
GIHN-K32 LO	32	32	43	28	71	M27×2	80	37	118.5	38	66	22	0.6	4		65	81	1.2
GIHN-K40 LO	40	40	53	33	90	M33×2	97	46	146	47	80	26	0.6	4		99	156	2.1
GIHN-K50 LO	50	50	66	40	109	M42×2	120	57	179.5	58	96	32	0.6	4		156	250	4.5
GIHN-K63LO	63	63	83	53	136	M48×2	140	64	211	70	114	38	1	4		253	343	7.6
GIHN-K70 LO	70	70	92	57	155	M56×2	160	76	245	80	135	42	1	4		315	540	9.5
GIHN-K80 LO	80	80	105	67	170	M64×3	180	86	270	90	148	48	1	4		400	560	14.0
GIHN-K90 LO	90	90	115	72	185	M72×3	195	91	296	100	160	52	1	4		490	750	17
GIHN-K100 LO	100	100	130	85	211	M80×3	210	96	322	110	178	62	1	4		607	960	28.0
GIHN-K110 LO	110	110	140	88	235	M90×3	235	106	364	125	190	62	1	4		655	1200	32
GIHN-K125 LO	125	125	160	103	265	M100×3	260	113	405	135	200	72	1	4		950	1430	46
GIHN-K160 LO	160	160	200	130	326	M125×4	310	126	488	165	250	82	1	4		1370	2200	82.5
GIHN-K200 LO	200	200	250	162	418	M160×4	390	161	620	215	320	102	1	4		2120	3650	168
GIHN-K250 LO	250	250	350	192	580	M200×4	530	205	847	300	420	142	1	4		3550	6400	425
GIHN-K320 LO	320	320	450	260	700	M250×6	640	260	1015	360	520	170	1	4		6100	8650	790

尺寸单位为毫米.
滑动磨擦副：钢/钢 *此标识的产品无油杯. 注：如果是左旋螺纹，轴承型号需加“L”，例如：GIHN-KL30LO.
设计结构特点：由杆端体与GEEW..ES系列向心关节轴承组装而成，用挡圈固定，锻杆端体材料为碳钢（锻造成型d≤70或铸铁d≥80)，杆端柄内螺纹部有轴向缝并锁紧装置，可通过螺钉锁紧，可通过油杯润滑。产品具有很强的承载力常用于液压缸、油缸，又名：油缸耳环

Dimensions in mm.Sliding contact surfaces:Steel/Steel
Note:For left-hand thread,suffix "L"is added to bearing number and thread sign,e.g.GIHN-KL 30 LO
Design and application features:
Rod end with locking slot is made up of a rod end and a radial spherical plain bearing of series GE...ES,fixed in housing by snap rings,rod end of carbon steel(d100)or spheroidal graphite cast steel(d 110),Thread can be closed because shand is slotted,thread clamping by two hexagon socket screws;Can be lubricated via a nipple.It has characteristics of large load-capability,easy mounting and dismounting and mechanism simplification.

油润滑锁口型杆端关节轴承

Spherical Plain Bearings

GAS..

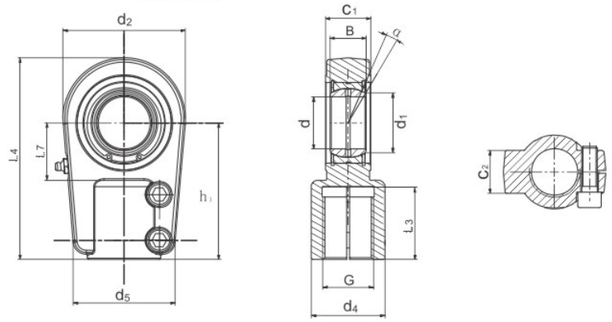

型号 Part No.	尺寸mm Dimensions											负荷KN Load ratings		重量KG Weight
	d	B	C_1	d_2	G	d_4	L_7	L_3 min	d_5	h_1	L_4	dyn. C	stat. C0	Kg≈
GAS20	20	16	23	56	M18×2	28	25	30	48	65	95	48	82	0.42
GAS25	25	20	23	56	M18×2	28	25	30	48	65	95	63	82	0.57
GAS30	30	22	28	64	M24×2	34	30	35	56	75	109	82.7	122	0.91
GAS35	35	25	30	78	M30×2	45	40	40	66	90	132	107	177	1.9
GAS40	40	28	35	94	M39×3	56.5	45	48	78	105	155	135	287	3
GAS50	50	35	40	116	M50×3	70	55	66	89	135	198	210	422	4.9
GAS60	60	44	50	130	M64×3	87	65	84	118	170	240	234	522	7.5
GAS70	70	49	55	154	M80×3	110	75	110	128	195	278	431	707	11.5
GAS80	80	55	60	176	M90×3	128	80	120	156	210	305	554	870	16.5
GAS90	90	60	65	210	M100×3	152	90	140	168	250	365	671	1284	35.5
GAS100	100	70	70	230	M110×4	170	105	150	171	275	400	842	1460	43.5
GAS110	110	70	80	264	M120×4	180	115	160	189	300	442	910	2024	60.5
GAS120	120	85	90	340	M150×4	210	140	190	243	360	540	1336	2970	96.5
GAS140	140	90	110	380	M160×4	230	185	200	248	420	620	1665	3500	138
GAS160	160	105	110	480	M180×4	260	200	220	273	460	710	1935	4302	209

尺寸单位为毫米.
注：如果是左旋螺纹，轴承型号需加“L”，例如：GASL30. 滑动磨擦副：钢/钢
设计结构特点：由杆端体与GE..ES,GE..ES2RS系列向心关节轴承组装而成，用挡圈固定，锻杆端体材料为碳钢（锻造成型d≤70或铸铁d≥80），杆端柄内螺纹部有轴向缝并锁紧装置，可通过螺钉锁紧，可通过油杯润滑。
产品具有很强的承载力常用于液压缸、油缸，又名：油缸耳环

Dimensions in mm
Note:For left-hand thread,suffix "L"is added to bearing number and thread sign,e.g.GASL30
Sliding contact surfaces:Steel/Steel
Design and application features:
Rod end with locking slot is made up of a rod end and a radial spherical plain bearing of series GE...ES,fixed in housing by snap rings,rod end of carbon steel(d<70)or spheroidal graphite cast steel(d-80),Thread can be closed because shank is slotted,thread clamping by two hexagon socket screws;Can be lubricated via a nipple.It has characteristics of large load-capability,easy mounting and dismounting and mechanism simplification.

油润滑焊接型杆端关节轴承

Spherical Plain Bearings

GK..DO

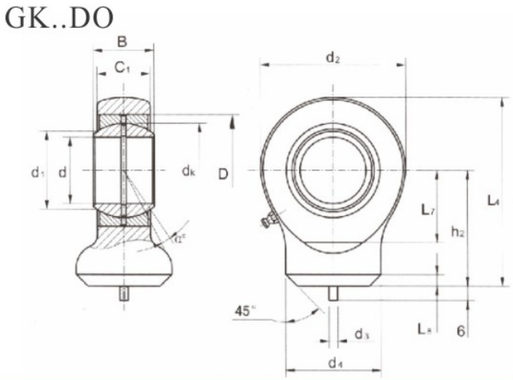

型号 Part No.	尺寸mm Dimensions												负荷KN Load ratings		重量KG Weight
	d	B	d_K	C_1	d_2	h_2	L_4 max	d_4	d_3	L_8	R_{1S} min	a ≈	dyn. C	stat. C0	Kg≈
GK10DO1)	10	9	16	7	29	24	38.5	15	3	1.5	0.3	12	8.1	15	0.041
GK12DO1)	12	10	18	8	34	27	44	17.5	3	1.5	0.3	10	10	21	0.066
GK15DO	15	12	22	10	40	31	51	21	4	2	0.3	8	16	32	0.12
GK17DO	17	14	25	11	46	35	58	24	4	2	0.3	10	21	40	0.19
GK20DO	20	16	29	13	53	38	64.5	27.5	4	2	0.3	9	30	54	0.23
GK25DO	25	20	35.5	17	64	45	77	33.5	4	3	0.6	7	48	72	0.43
GK30DO	30	22	40.7	19	73	51	87.5	40	4	3	0.6	6	62	95	0.64
GK35DO	35	25	47	21	82	61	102	47	4	3	0.6	6	79	125	0.96
GK40DO	40	28	53	23	92	69	115	52	4	4	0.6	7	99	156	1.3
GK45DO	45	32	60	27	102	77	128	58	6	4	0.6	7	127	208	1.8
GK50DO	50	35	66	30	112	88	144	62	6	4	0.6	6	156	250	2.5
GK60DO	60	44	80	38	135	100	167.5	70	6	4.5	1	6	245	390	3.9
GK70DO	70	49	92	42	160	115	195	80	6	6	1	6	313	510	6.6
GK80DO	80	55	105	47	180	141	231	95	6	6	1	6	400	620	8.7

尺寸单位为毫米.
标1)不能通过油杯加油（无油杯）.滑动磨擦副：钢/钢
设计结构特点：由焊接性能良好的杆端体（锻造）与GE..E、GE..ES、GE..ES-2RS系列向心关节轴承组装而成，杆端柄部有45焊接面并装有开口销，焊接时方便定位,可通过油杯或杆端眼润滑.产品具有很强的承载力常用于液压缸、油缸，又名：油缸耳环.

Dimensions in mm 1)Can not be lubricated.
Sliding contact surfaces:Steel/Steel
Design and application features:
Rod end with welding shank is made up of a rod end and a radial spherical plain bearing of series GE...E or GE...ES fixed in housing by snap rings,rod end of weldable steel and phosphated,with rectangular welding face;Can be lubricated via a nipple.It has characteristics of large load capability,easy mounting and dismounting and mechanism simplification.

GF..DO

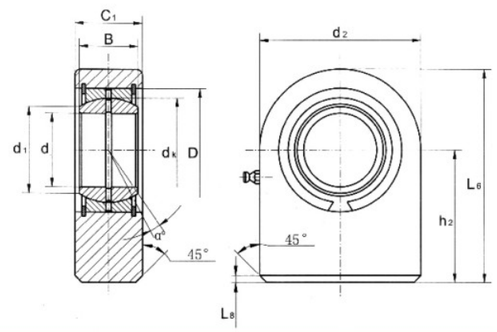

型号 Part No.	尺寸mm Dimensions											负荷KN Load ratings		重量KG Weight
	d	B	dK	C1	d2	h2	L6 max	R1S min	d1	L8	a ≈	dyn. C	stat. C0	Kg≈
GF15DO	15	12	22	16	45	31	53.5	0.3	18.4	2	8	17	53	0.22
GF16DO	16	14	22	17.5	48	35	59	0.3	20.7	2	10	21.2	59	0.29
GF17DO	17	14	25	17.5	48	35	59	0.3	20.7	2	10	21.2	65	0.29
GF20DO	20	16	29	19	50	38	63	0.3	24.2	2	9	30	67	0.35
GF25DO	25	20	35.5	23	55	45	72.5	0.6	29.3	2	7	48	69	0.53
GF30DO	30	22	40.7	28	65	51	83.5	0.6	34.2	2	6	62	118	0.87
GF35DO	35	25	47	30	83	61	102.5	0.6	39.8	2	6	79	196	1.5
GF40DO	40	28	53	35	100	69	119	0.6	45	3	7	99	305	2.4
GF45DO	45	32	60	40	110	77	132	0.6	50.8	3	7	127	386	3.4
GF50DO	50	35	66	40	123	88	149.5	0.6	55.9	3	6	156	441	4.4
GF60DO	60	44	80	50	140	100	170	1	66.8	4	6	245	570	7.1
GF70DO	70	49	92	55	164	115	197	1	77.9	4	6	313	724	10
GF80DO	80	55	105	60	180	141	231	1	89.4	4	6	400	804	15
GF90DO	90	60	115	65	226	150	263	1	98.1	4	5	490	1340	23.5
GF100DO	100	70	130	70	250	170	295	1	109.5	4	7	610	1500	31.5
GF110DO	110	70	140	80	295	185	332.5	1	121.2	4	6	655	2160	48.5
GF120DO	120	85	160	90	360	210	390	1	135.5	4	6	950	3250	79

尺寸单位为毫米.
滑动磨擦副：钢/钢
设计结构特点：由焊接性能良好的杆端体（锻造）和GE..ES、GE..ES-2RS系列向心关节轴承组装而成，杆端柄部 为方底，
并具有45度焊接缝，可通过油杯或杆端眼润滑.产品具有很强的承载力常用于液压缸、油缸，又名：油缸耳环.

Dimensions in mm
Sliding contact surfaces:Steel/Steel
Design and application features:
Rod end with welding shank is made up of a rod end and a radial spherical plain bearing of series GE...E or GE...ES
fixed in housing by snap rings,rod end of weldable steel and phosphated,with rectangular welding face;Can be lubricated
via a nipple.It has characteristics of large load capability,easy mounting and dismounting and mechanism simplification.

油润滑焊接型杆端关节轴承
Spherical Plain Bearings

GF..LO

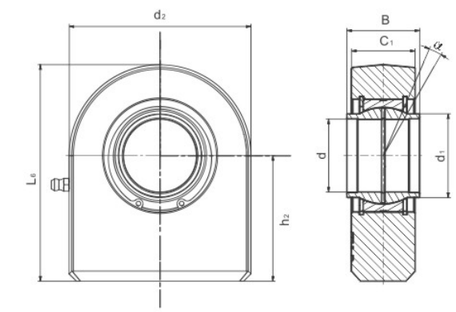

型号 Part No.	尺寸mm Dimensions								负荷KN Load ratings		重量KG Weight
	d	B	d1	h2	d2	C1	L6	a ≈	dyn. C	stat. C0	Kg≈
GF20LO	20	20	25	38	50	19	63	4	30	74	0.36
GF25LO	25	25	30.5	45	55	23	72.5	4	48	95	0.54
GF32LO	32	32	38	65	70	27	100	4	62.5	168	1.12
GF40LO	40	40	46	69	100	35	119	4	100	268	2.5
GF50LO	50	50	57	88	123	40	149.5	4	156	362	4.6
GF63LO	63	63	71.5	107	145	50	179.5	4	248	570	9.3
GF70LO	70	70	79	115	164	55	197	4	315	800	11.25
GF80LO	80	80	91	141	180	60	231	4	400	874	15.75
GF90LO	90	90	99	150	226	65	263	4	490	1045	24
GF100LO	100	100	113	170	250	70	295	4	610	1330	33.95
GF110LO	110	110	124	185	295	80	332.5	4	655	1490	49.00

尺寸单位为毫米. 滑动磨擦副：钢/钢
设计结构特点：由焊接性能良好的杆端体（锻造）和GEEW..ES系列向心关节轴承组装而成，杆端柄部 为方底，
并具有45度焊接缝，可通过油杯或杆端眼润滑.产品具有很强的承载力常用于液压缸、油缸，又名：油缸耳环.

Dimensions in mm
Sliding contact surfaces:Steel/Steel
Design and application features:
Rod end with welding shank is made up of a rod end and a radial spherical plain bearing of series GEEW...ES,
fixed in housing by snap rings,rod end of weldable steel and phosphated,with rectangular welding face;Can be lubricated
via a nipple.It has characteristics of large load capability,easy mounting and dismounting and mechanism simplification.

油润滑锁口型杆端关节轴承

Spherical Plain Bearings

GIHO-K..DO

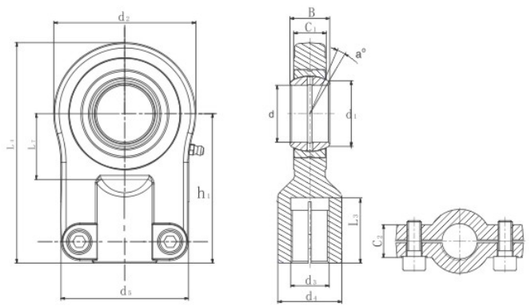

型号 Part No.	尺寸mm Dimensions														负荷KN Load ratings		重量KG Weight
	d 公差	B	d1	C1 max	d2 max	G 6H	h1	L3 min	L4 max	C2	d4	d5	L7	a ≈	dyn. C	stat. C0	Kg≈
GIHO-K12 DO*	12 -0.008	10	15	8	35	M10×1.25	42	15	59.5	13	17	40	16	11	10.8	17	0.12
GIHO-K16 DO	16 -0.008	14	20.7	11	45	M12×1.25	48	17	70.5	13	21	45	20	10	21.1	28.5	0.22
GIHO-K20 DO	20 -0.01	16	24.2	13	55	M14×1.5	58	19	85.5	17	25	55	25	9	30	42.5	0.43
GIHO-K25 DO	25 -0.01	20	29.3	17	65	M16×1.5	68	23	100.5	17	30	62	30	7	48	67	0.67
GIHO-K30 DO	30 -0.01	22	34.2	19	80	M20×1.5	85	29	125	19	36	77	35	6	62	108	1.25
GIHO-K40 DO	40 -0.012	28	45	23	100	M27×2.0	105	37	155	23	45	90	45	7	100	156	2.16
GIHO-K50 DO	50 -0.012	35	55.9	30	120	M33×2.0	130	46	190	30	55	105	58	6	156	245	3.9
GIHO-K60 DO	60 -0.015	44	66.8	38	160	M42×2.0	150	57	230	38	68	134	68	6	245	380	7.15
GIHO-K80 DO	80 -0.015	55	89.4	47	205	M48×2.0	185	64	287.5	47	90	156	82	6	400	585	15
GIHO-K100 DO	100 -0.015	70	109.5	55	240	M64×3.0	240	86	360	55	110	190	116	7	610	865	27.3

尺寸单位为毫米.

注：如果是左旋螺纹，轴承型号需加“L”，例如：GIHO-KL50 DO. 带“*”的型号不能润滑 滑动磨擦副：钢/钢

设计结构特点：杆端座体带有左旋或右旋的内螺纹，由向心关节轴承GE..ES或GE..ES 2RS和杆端座体组成，带锁紧 口和紧定螺栓,杆端座体带有润滑油孔或油杯。产品具有很强的承载力常用于液压缸、油缸，又名：油缸耳环

Dimensions in mm

Note:For left-hand thread,Please add suffix "L",e.g.GIHO-KL50 DO.

Relubrication not possible for the size marked"*"

Sliding contact surfaces:Steel/Steel

Design and application features:

Rod end housing with right or left-hand female thread,It is made up of a radial spherical plain bearingGE..ES or GE..ES 2RS and rod end housing,with locking slot and unt.Rod end housing with a lubricating hole or grease nipple.

Ithas characteristics of large loadcapability,easy mounting and dismounting and mechanism simplification.

关节球

Rod End Ball

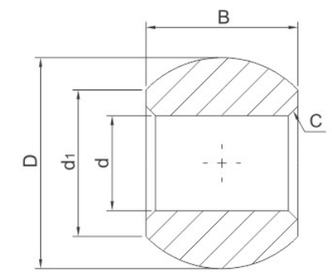

型号 Part No.	尺寸mm Dimensions					负荷KN Load ratings	重量KG Weight
	D H7	D	B	d1	C	Hardness	Kg≈
3TK	3	7.938	6	5.1	0.3	HRC58-64	0.0016
4TK	4	9.525	7	7.4	0.3		0.0028
5TK	5	11.112	8	7.7	0.3		0.004
6TK	6	12.7	9	9	0.3		0.006
8TK	8	15.875	12	10.4	0.5		0.011
10TK	10	19.05	14	12.9	0.5		0.018
12TK	12	22.225	16	15.4	0.8		0.026
14TK	14	25.4	19	16.9	0.8		0.04
16TK	16	28.575	21	19.4	0.8		0.054
18TK	18	31.75	23	21.9	0.8		0.073
20TK	20	34.925	25	24.4	0.8		0.093
22TK	22	38.1	28	25.8	0.8		0.122
25TK	25	42.862	31	29.6	0.8		0.172
30TK	30	50.4	37	34.8	0.8		0.275
35TK	35	57.1	43	36.5	0.5		0.385
40TK	40	66.6	49	45.1	0.8		0.609
50TK	50	82.5	60	56.6	0.8		1.138

尺寸单位为毫米

用于：工具机械、纺织、食品、印刷、农机、包装、木工等机械行业

材料：轴承钢，淬火，HRC58-64球面可以镀硬铬，也可以用不锈轴承钢制造。

Dimensions in mmFor: machine tools, textile, food, printing, agricultural machinery,packaging, woodworking and othermachinery industry

Material: bearing steel, hardened,HRC58-64 ball can be hard chrome plated, youcan also use stainless steel bearings

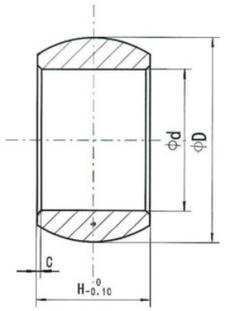

型号 Part No.		尺寸mm Dimensions			
GE...C	GE.../X	D	d	H 0.10	C
GE4C	GE4/X	8.00	$4^{0}_{-0.008}$	5	0.3
GE5C	GE5/X	10.00	$5^{0}_{-0.008}$	6	0.3
GE6C	GE6/X	10.00	$6^{0}_{-0.008}$	6	0.3
GE8C	GE8/X	13.00	$8^{0}_{-0.008}$	8	0.3
GE10C	GE10/X	16.00	$10^{0}_{-0.008}$	9	0.3
GE12C	GE12/X	18.00	$12^{0}_{-0.008}$	10	0.3
GE15C	GE15/X	22.00	$15^{0}_{-0.008}$	12	0.4
GE17C	GE17/X	25.00	$17^{0}_{-0.008}$	14	0.4
GE20C	GE20/X	29.00	$20^{0}_{-0.010}$	16	0.4
GE25C	GE25/X	35.50	$25^{0}_{-0.010}$	20	0.6
GE30C	GE30/X	40.70	$30^{0}_{-0.010}$	22	0.6
GE35C	GE35/X	47.00	$35^{0}_{-0.010}$	25	0.6
GE40C	GE40/X	53.00	$40^{0}_{-0.012}$	28	0.7
GE45C	GE45/X	60.00	$45^{0}_{-0.012}$	32	0.8
GE50C	GE50/X	66.00	$50^{0}_{-0.012}$	35	0.8
GE60C	GE60/X	80.00	$60^{0}_{-0.012}$	44	0.8

材料					
Gcr15	95Cr18	-	-	-	-

GCr15热处理硬度为HRC58-62 The GCr 15 hardness is HRC58-62 after heat treatment
95Cr18热处理硬度为HRC58-62 The 95Cr18 hardness is HRC58-62 after heat treatment
材料为GCr15的球面镀硬铬 The spherical suface is with hard chrome plate

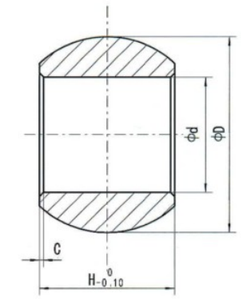

型号 Part No.		尺寸mm Dimensions			
GEG...C	GEG.../X	D	d	H 0.10	C
GEG4C	GEG4/X	10.00	$4^{0}_{-0.008}$	7	0.3
GEG5C	GEG5/X	13.00	$5^{0}_{-0.008}$	9	0.3
GEG6C	GEG6/X	13.00	$6^{0}_{-0.008}$	9	0.3
GEG8C	GEG8/X	16.00	$8^{0}_{-0.008}$	11	0.3
GEG10C	GEG10/X	18.00	$10^{0}_{-0.008}$	12	0.3
GEG12C	GEG12/X	22.00	$12^{0}_{-0.008}$	15	0.3
GEG15C	GEG15/X	25.00	$15^{0}_{-0.008}$	16	0.4
GEG17C	GEG17/X	29.00	$17^{0}_{-0.008}$	20	0.4
GEG20C	GEG20/X	34.93	$20^{0}_{-0.010}$	25	0.4
GEG20C-35.50	/	35.50	$20^{0}_{-0.010}$	25	0.4
GEG25C	GEG25/X	40.70	$25^{0}_{-0.010}$	28	0.6
GEG30C	GEG30/X	47.00	$30^{0}_{-0.010}$	32	0.6
GEG35C	GEG35/X	53.00	$35^{0}_{-0.012}$	35	0.6
GEG40C	GEG40/X	60.00	$40^{0}_{-0.012}$	40	0.7

材料					
Gcr15	95Cr18	-	-	-	-

GCr15热处理硬度为HRC58-62 The GCr 15 hardness is HRC58-62 after heat treatment
95Cr18热处理硬度为HRC58-62 The 95Cr18 hardness is HRC58-62 after heat treatment
材料为GCr15的球面镀硬铬 The spherical suface is with hard chrome plate

关节球

Rod End Ball

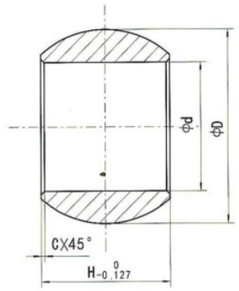

型号 Part No.			尺寸mm Dimensions			
GBL...DP	GBL...M	GBL...M-420	D	d(-0.013~+0.038)	H (-0.127~0)	C
CBL3DP	CBL3M	CBL3M-420	11.112	4.826	7.925	0.3
CBL4DP	CBL4M	CBL4M-420	12.700	6.350	9.530	0.3
CBL5DP	CBL5M	CBL5M-420	15.875	7.938	11.11	0.3
CBL6DP	CBL6M	CBL6M-420	18.266	9.525	12.70	0.3
CBL7DP	CBL7M	CBL7M-420	20.638	11.112	14.28	0.3
CBL8DP	CBL8M	CBL8M-420	23.813	12.700	15.88	0.3
CBL1ODP	CBL10M	CBL10M-420	28.575	15.875	19.05	0.4
CBL12DP	CBL12M	CBL12M-420	33.338	19.050	22.23	0.4
CBL14DP	CBL14M	CBL14M-420	34.925	22.225	22.23	0.5
CBL16DP	CBL16M	CBL16M-420	47.625	25.400	34.93	0.5
材料						
Gcr15	95Cr18	30Cr13	-	-	-	-

GCr15热处理硬度为HRC57-61 The GCr 15 hardness is HRC57-61 after heat treatment
95Cr18热处理硬度为HRC57-61 The 95Cr18 hardness is HRC57-61 after heat treatment
30Cr13热处理硬度为 HRC53-56 The heat treatment hardness of 30Cr13 is hrc53-56
材料为GCr15的球面镀硬铬 The spherical suface is with hard chrome plate

关节轴承的径向游隙

Radial internal clearance of spherical plain bearings

型号 Part No.	孔径 超过 到	C2组 group C2	基本组 group normal	C3组 group C3
	d over-incl(mm)	min-max(μm)	min-max(μm)	min-max(μm)
GE..E GE..ES GE..ES 2RS GE..HO 2RS GE..LO	~12	8~32	32~68	68~104
	12~20	10~40	40~82	82~124
	20~35	12~50	50~100	100~150
	35~60	15~60	60~120	120~180
	60~90	18~72	72~142	142~212
	90~140	18~85	85~165	165~245
GEG..E GEG..ES GEG..ES 2RS	~10	8~32	32~68	68~104
	10~17	10~40	40~82	82~124
	17~30	12~50	50~100	100~150
	30~50	15~60	60~120	120~180
	50~80	18~72	72~142	142~212
	80~120	18~85	85~165	165~245
GEZ..ES 2RS GEGZ..ES 2RS GEGZ..ES 2RS	~15.875		50~150	
	15.875~50.8		80~180	
	50.8~76.2		100~200	
	76.2~152.4		130~230	
G..PB S..PB COM GEBK..S/GEBJ..S	~30		0~60	
GE..UK GE..PW SGE..UK S..PW GEG..UK COM..T SGE..FW HCOM..T	~12		4~28	
	12~20		5~35	
	20~30		6~44	
GEG..UK 2RS	~30		0~50	
	30~50		0~60	
	50~80		0~72	
	80~120		0~85	
GE..UK 2RS	~20		0~40	
	20~35		0~50	
	35~60		0~60	
	60~90		0~72	
	90~140		0~85	